SWC型 SWP型

十字轴式万向联轴器

THE CARDAN UNIVERSAL COUPLING

2020年7月版（Jul .2020 Edition)

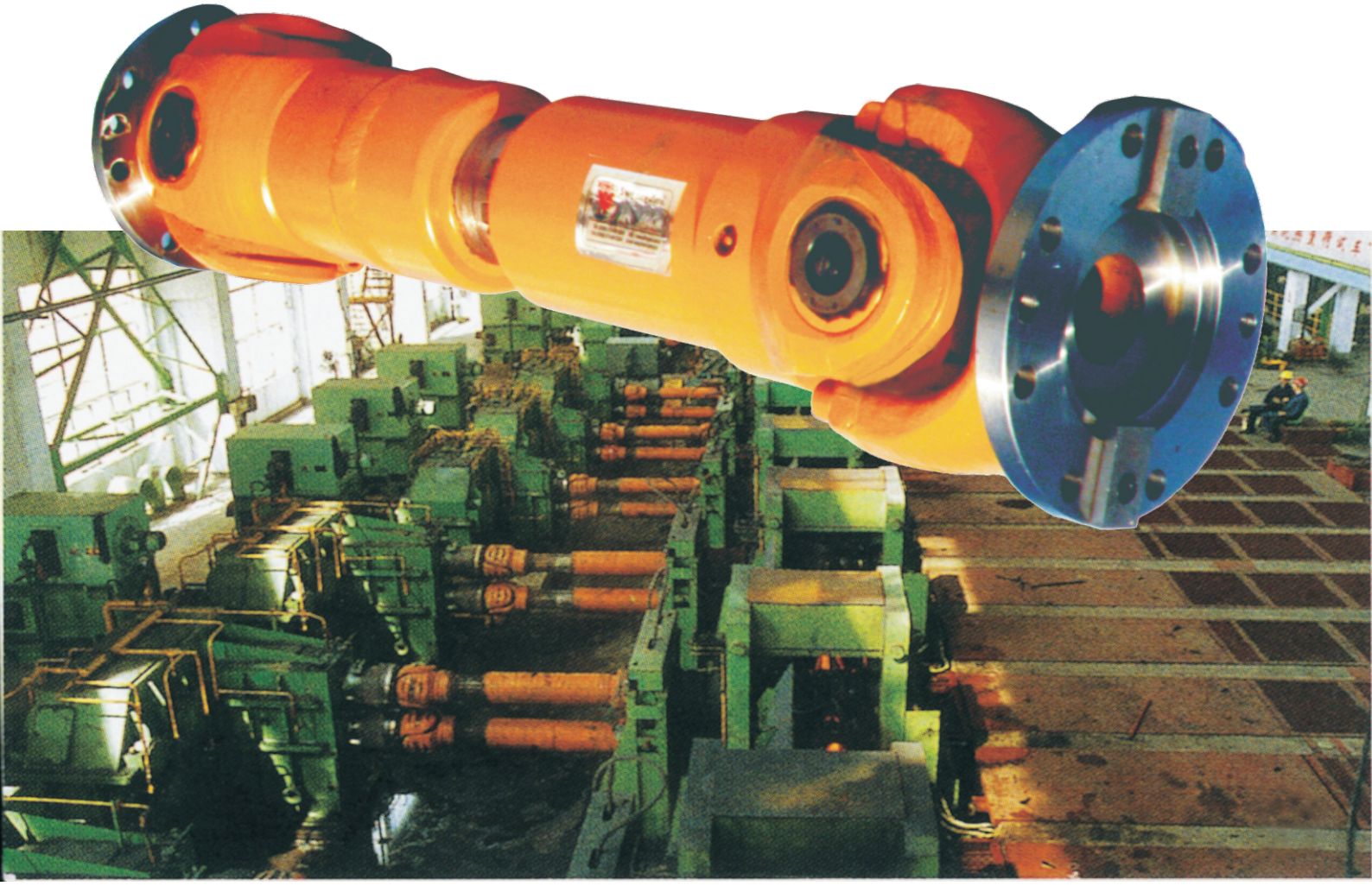

宁波伟隆港口机械有限公司

NINGBO WEILONG PORT MACHINERY CO., LTD.

宁波伟隆传动机械有限公司

NINGBO WEILONG TRANSMISSION MACHINERY CO., LTD.

一、前　言

SWC型、SWP型十字轴式万向联轴器能广泛应用于冶金、起重、工程运输、矿山、石油、船舶、煤炭、橡胶、造纸机械及其它重机行业的机械轴系中传递转矩。

SWC型、SWP型十字轴式万向联轴器的主要特点为：

1.具有较大的角度补偿能力，SWC型轴线折角可达15°~25°，SWP型可达10°左右。

2.结构紧凑合理。SWC型采用整体式叉头，使运载更具可靠性。

3.承载能力大。与回转直径相同的其它型式的联轴器相比较，其所传递的扭矩更大，此对回转直径受限制的机械设备，其配套范围更具优越性。

4.传动效率高。其传动效率达98-99.8%，用于大功率传动，节能效果明显。

5.运载平稳，噪声低，装拆维护方便。

1.Foreword

Type SWC & SWP Universal Couplings can be used to transmit torque in metallurgy, hoisting, engineering transportation, mining, petroleum, ship, coal industry, rubber, paper making machines and heavy machinery industry. They are suitable for heavy machinery shafting transmission.

The major characteristics of Series SWC & SWP Universal Couplings

1. relative big angular compensation ability. Permissible axis angle for SWC type is between 15° and 25°. The permissible axis angle for SWP is about 10°.

2. Compact and reasonable configuration. The integral fork adopted on SWC type makes operation reliable.

3. high load capability. Compared with other types of couplings with the same rotatable diameter, it can transmit higher torque and have more suitability for machines and equipments whose rotatable diameters are limited.

4. High transmission efficiency, reaching 98-99.8%. It saves much energy during transmitting high power.

5. Stable operating, low noise, convenient maintenance and easy assemble and disassemble.

二、标记示例

2.Mark Example

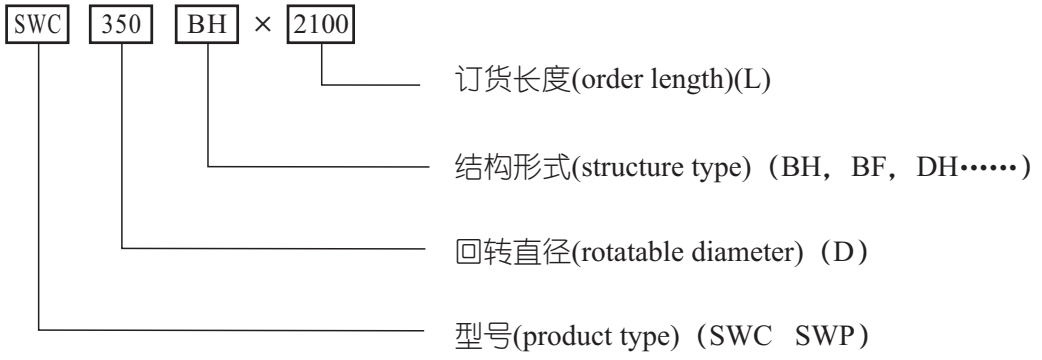

三、型式与尺寸

3.Types and Dimensions

1、SWC型十字轴式万向联轴器分为以下七种型式：

① BH型——标准伸缩焊接式万向联轴器，其基本参数和主要尺寸，见图1和表1。

② BF型——标准伸缩法兰式万向联轴器，其基本参数和主要尺寸，见图2和表2。

③ DH型——短伸缩焊接式万向联轴器，其基本参数和主要尺寸，见图3和表3。

④ CH型——长伸缩焊接式万向联轴器，其基本参数和主要尺寸，见图4和表4。

⑤ WH型——无伸缩焊接式万向联轴器，其基本参数和主要尺寸，见图5和表5。

⑥ WF型——无伸缩法兰式万向联轴器，其基本参数和主要尺寸，见图6和表6。

⑦ WD型——无伸缩短式万向联轴器，其基本参数和主要尺寸，见图7和表7。

2、SWP型十字轴式万向联轴器分为以下七种型式：

① A型——有伸缩长型万向联轴器，其基本参数和主要尺寸，见图8和表8。

② B型——有伸缩短型万向联轴器，其基本参数和主要尺寸，见图9和表9。

③ C型——无伸缩短型万向联轴器，其基本参数和主要尺寸，见图10和表10。

④ D型——无伸缩长型万向联轴器，其基本参数和主要尺寸，见图11和表11。

⑤ E型——有伸缩双法兰长型万向联轴器，其基本参数和主要尺寸，见图12和表12。

⑥ F型——大伸缩长型万向联轴器，其基本参数和主要尺寸，见图13和表13。

⑦ G型——有伸缩超短型万向联轴器，其基本参数和主要尺寸，见图14和表14。

1. SWC type of universal couplings have following seven structure types:

① BH type —standard welded shaft design universal coupling with length compensation.The parameters and specifications are in fig1 and Tab1;

②BF type—standard flanged design universal couplings with length compensation. The basic technique data and specifications are in fig2 and Tab2.

③ DH type — welded shaft designuniversal coupling with short length compensation. The parameters data and specifications are in fig3 and Tab3.

④ CH type—welded shaft design universal coupling with long length compensation. The parameters data and specifications are in fig4 and Tab4.

⑤ WH type—welded shaft design universal coupling without length compensation. The parameters data and specifications are in fig5 and Tab5.

⑥WF type—flanged design universal coupling without length compensation. The parameters and specifications are in fig6 and Tab6.

⑦ WD type—short flanged design universal coupling without length compensation. The parameters and specifications are in fig7 and Tab7.

2. SWC type of universal couplings have following seven structure types:

① A type— long design universal coupling with length compensation. The parameters and specifications are in fig8 and Tab8.

② B type —short design universal coupling with length compensation. The basic technique and specifications are in fig9 and Tab9.

③ C type—short design universal coupling without length compensation. The parameters and specifications are in fig10 and Tab10.

④ D type — long design universal coupling without length compensation. The parameters and specifications are in fig11 and Tab11.

⑤E type— double flanged design universal coupling with length compensation. The parameters and specifications are in fig12 and Tab12.

⑥ F type —long design universal coupling with big length compensation. The parameters and specifications are in fig13 and Tab13.

⑦ G type— super short design universal coupling with length compensation. The parameters and specifications are in fig14 and Tab14.

SWC——BH型 标准伸缩焊接式万向联轴器　　(JB5513-1991)

SWC——BH TYPE standard welded shaft design universal coupling with length compensation (Jb5513—1991)

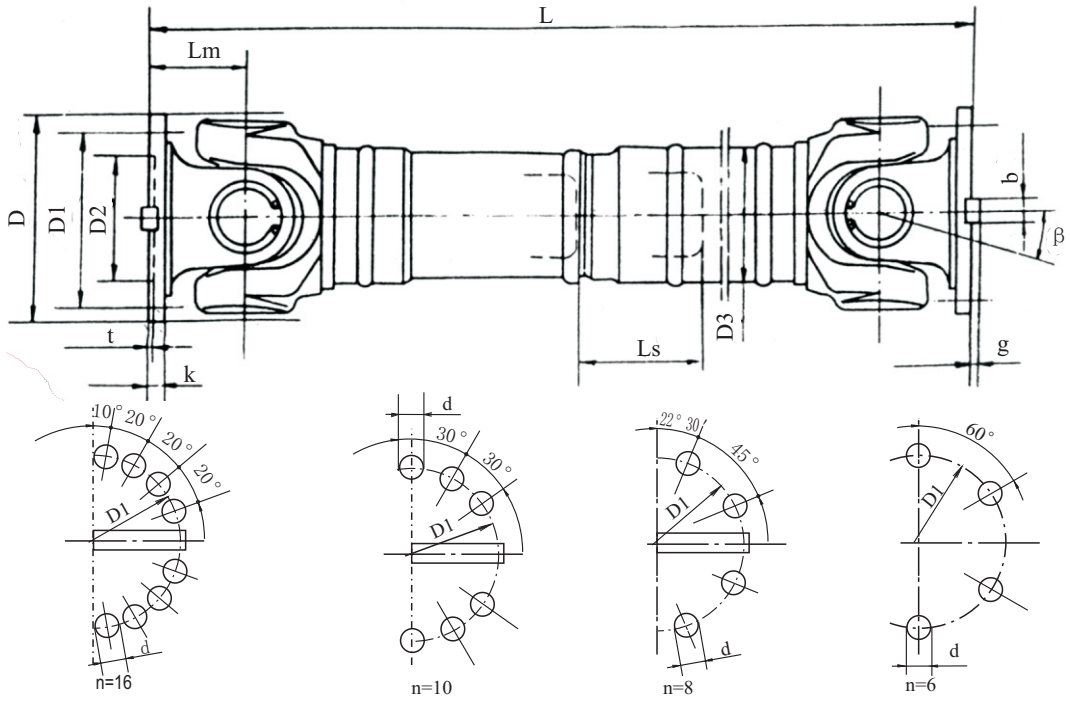

图1 Fig1

表1　　BH型——标准伸缩焊接式万向联轴器基本参数和主要尺寸

Table 1 The Parameters and Dimensions for BH type of standard welded shaft design universal couplings with length compensation.

型号 Types	回转直径 Rotatable Diameter D mm	公称转矩 Diameter Normal Tn kNm	疲劳转矩 Fatigue torque Tf kNm	轴线折角 Axis angle β (°)	伸缩量 Length Compensation Ls mm	尺寸(Dimensions)mm										转动惯量I Rotary inertia kg·m²		重量G Weight kg	
						L min	D1 (js11)	D2 (H7)	D3	L_m	n-d	k	t	b (h9)	g	L min	增长 Length compensation 100mm	L min	增长 Length compensation 100mm
SWC 100 BH	100	1.25	0.63	≤25	55	390	84	57	60	55	6-9	7	2.5	—	—	0.0044	0.00019	6.1	0.35
SWC 120 BH	120	2.5	1.25	≤25	80	485	102	75	70	65	8-11	8	2.5	—	—	0.0109	0.00044	10.8	0.55
SWC 150 BH	150	5	2.5	≤25	80	590	130	90	89	80	8-13	10	3.0	—	—	0.0423	0.00157	24.5	0.85
SWC 180 BH	180	12.5	6.3	≤25	100	810	155	105	114	110	8-17	17	5.0	—	—	0.1750	0.0070	70	2.8
SWC 225 BH	225	40	20	≤15	140	920	196	135	152	120	8-17	20	5.0	32	9.0	0.5380	0.0234	122	4.9
SWC 250 BH	250	63	31.5	≤15	140	1035	218	150	168	140	8-19	25	6.0	40	12.5	0.9660	0.0277	172	5.3
SWC 285 BH	285	90	45	≤15	140	1190	245	170	194	160	8-21	27	7.0	40	15.0	2.0110	0.0510	263	6.3
SWC 315 BH	315	125	63	≤15	140	1315	280	185	219	180	10-23	32	8.0	40	15.0	3.6050	0.0795	382	8.0
SWC 350 BH	350	180	90	≤15	150	1410	310	210	267	194	10-23	35	8.0	50	16.0	7.0530	0.2219	582	15.0
SWC 390 BH	390	250	125	≤15	170	1590	345	235	267	215	10-25	40	8.0	70	18.0	12.164	0.2219	738	15.0
SWC 440 BH	440	355	180	≤15	190	1875	390	255	325	260	16-28	42	10.0	80	20.0	21.420	0.4744	1190	21.7
SWC 490 BH	490	500	250	≤15	190	1985	435	275	325	270	16-31	47	12.0	90	22.5	32.860	0.4744	1452	21.7
SWC 550 BH	550	710	355	≤15	240	2300	492	320	426	305	16-31	50	12.0	100	22.5	68.920	1.3570	2380	34.0

注：①T_f—在交变负荷下按疲劳强度所允许的转矩。
②L_{min}—缩短后的最小长度。
③L—安装长度,按需要确定。

Note:① T_f— Permissible torque determined according to fatigue strength under reversing loads.
②L_{min}—The min length when compressed.
③ L—Installation Length determined according to requirements.

SWC——BF型　标准伸缩法兰式万向联轴器　（JB5513－1991）

SWC—BF type standard flanged design universal couplings with length compensation (Jb5513—1991)

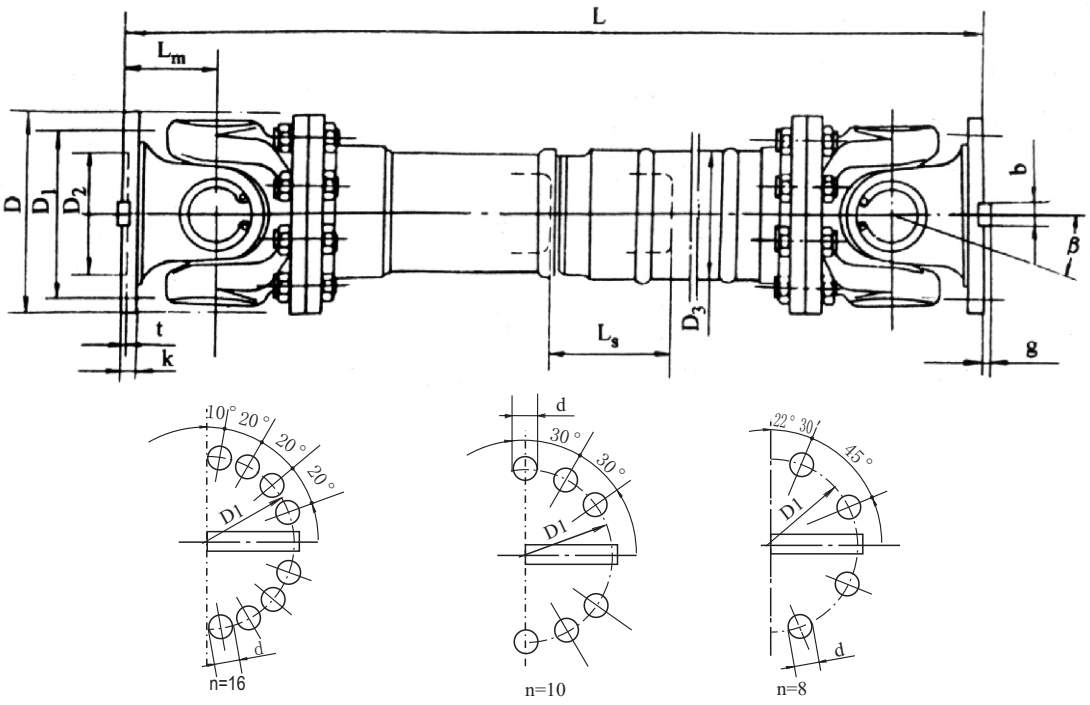

图2 Fig2

表2　BF型—标准伸缩法兰式万向联轴器基本参数和主要尺寸

Table 2 The Parameters and Dimensions for BF type standard flanged design universal couplings with length compensation.

型号 Types	回转直径 rotatable diameter D mm	公称转矩 Diameter Normal Tn kN·m	疲劳转矩 Fatigue torque Tf kN·m	轴线折角 Axis angle β (°)	伸缩量 Length Compensation Ls mm	尺寸 (Dimensions) mm										转动惯量 I Rotary inertia kg·m²		重量G Weight kg	
						L min	D1 (js11)	D2 (H7)	D3	Lm	n d	k	t	b (h9)	g	L min	增长 Length compensation 100mm	L min	增长 Length compensation 100mm
SWC 180 BF	180	12.5	6.3	≤25	100	810	155	105	114	110	8-17	17	5	—	—	0.267	0.0070	80	2.8
SWC 225 BF	225	40	20	≤15	140	920	196	135	152	120	8-17	20	5	32	9.0	0.788	0.0234	138	4.9
SWC 250 BF	250	63	31.5	≤15	140	1035	218	150	168	140	8-19	25	6	40	12.5	1.445	0.0277	196	5.3
SWC 285 BF	285	90	45	≤15	140	1190	245	170	194	160	8-21	27	7	40	15.0	2.873	0.0510	295	6.3
SWC 315 BF	315	125	63	≤15	140	1315	280	185	219	180	10-23	32	8	40	15.0	5.094	0.0795	428	8.0
SWC 350 BF	350	180	90	≤15	150	1410	310	210	267	194	10-23	35	8	50	16.0	9.195	0.2219	632	15.0
SWC 390 BF	390	250	125	≤15	170	1590	345	235	267	215	10-25	40	8	70	18.0	16.62	0.2219	817	15.0
SWC 440 BF	440	355	180	≤15	190	1875	390	255	325	260	16-28	42	10	80	20.0	28.24	0.4744	1290	21.7
SWC 490 BF	490	500	250	≤15	190	1985	435	275	325	270	16-31	47	12	90	22.5	46.33	0.4744	1631	21.7
SWC 550 BF	550	710	355	≤15	240	2300	492	320	426	305	16-31	50	12	100	22.5	86.98	1.3570	2567	34.0
SWC 620 BF	620	1000	500	≤15	240	2500	555	380	426	340	10-38	55	12	100	25.0	147.50	1.3570	3267	34.0

注：① T_f —在交变负荷下按疲劳强度所允许的转矩。

② L_{min} —$^{+}_{-}$缩短后的最小长度。

③ L —安装长度,按需要确定。

Note:① T_f—Permissible torque determined according to fatigue strength under reversing loads.

②L_{min}—The min length when compressed.

③ L—Installation Length determined according to requirements.

SWC——DH型　短伸缩焊接式万向联轴器　　(JB5513-1991)

SWC—DH type welded shaft design universal coupling with short length compensation (JB5513-1991)

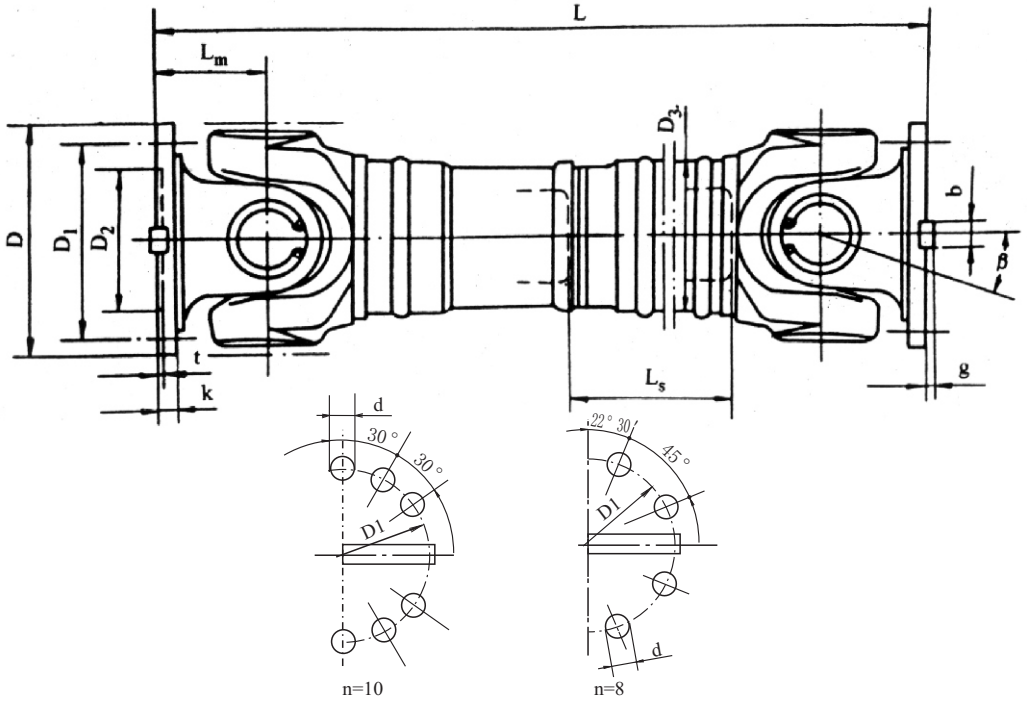

图3 Fig3

表3　　DH型——短伸缩焊接式万向联轴器基本参数和主要尺寸

Table 3 The Parameter and Dimensions for DH type welded shaft design universal coupling with short length compensation

型号 Types	回转直径 rotatable diameter D mm	公称转矩 Diameter Normal Tn kN·m	疲劳转矩 Fatigue torque Tf kN·m	轴线折角 Axis angle β (°)	伸缩量 Length Compensation Ls mm	尺寸 (Dimensions) mm L min	D1 (js11)	D2 (H7)	D3	Lm	n d	k	t	b (h9)	g	转动惯量 I Rotary inertia kg·m² L min	增长 Length compensation 100mm	重量G Weight kg L min	增长 Length compensation 100mm
SWC 180 DH1	180	12.5	6.3	≤25	75	650	155	105	114	110	8-17	17	5	—	—	0.165	0.0070	58	2.8
SWC 180 DH2					55	600										0.162		56	
SWC 180 DH3					40	550										0.160		52	
SWC 225 DH1	225	40	20	≤15	85	710	196	135	152	120	8-17	20	5	32	9.0	0.415	0.0234	95	4.9
SWC 225 DH2					70	640										0.397		92	
SWC 250 DH1	250	63	31.5	≤15	100	795	218	150	168	140	8-19	25	6	40	12.5	0.900	0.0277	148	5.3
SWC 250 DH2					70	735										0.885		136	
SWC 285 DH1	285	90	45	≤15	120	950	245	170	194	160	8-21	27	7	40	15.0	1.876	0.0510	229	6.3
SWC 285 DH2					80	880										1.801		221	
SWC 315 DH1	315	125	63	≤15	130	1070	280	185	219	180	10-23	32	8	40	15.0	3.331	0.0795	346	8.0
SWC 315 DH2					90	980										3.163		334	
SWC 350 DH1	350	180	90	≤15	140	1170	310	210	267	194	10-23	35	8	50	16.0	6.215	0.2219	508	15.0
SWC 350 DH2					90	1070										5.824		485	
SWC 390 DH1	390	250	125	≤15	150	1300	345	235	267	215	10-25	40	8	70	18.0	11.125	0.2219	655	15.0
SWC 390 DH2					90	1200										10.763		600	

注：① T_f —在交变负荷下按疲劳强度所允许的转矩。

② L_{min}—缩短后的最小长度。

③ L —安装长度,按需要确定。

Note:① T_f— Permissible torque determined according to fatigue strength under reversing loads.

②L_{min} —The min length when compressed.

③ L— Installation Length determined according to requirements.

SWC——CH型 长伸缩焊接式万向联轴器 （JB5513—1991）

SWC — CH type welded shaft design universal coupling with long length compensation (JB5513-1991)

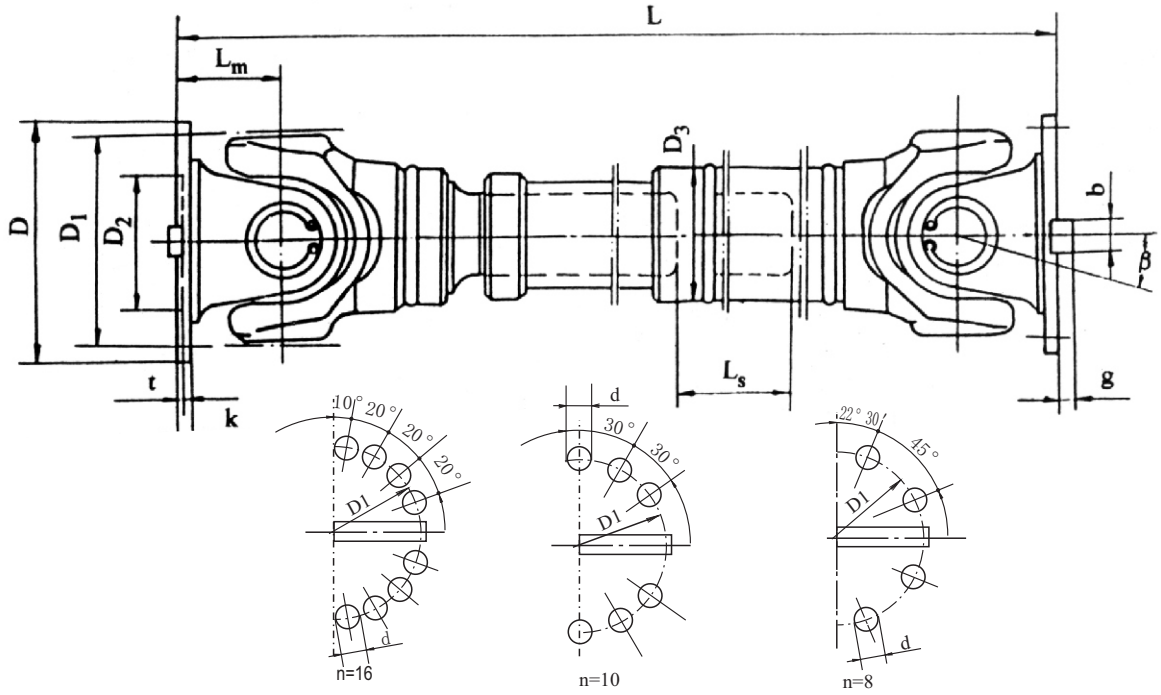

图4 Fig4

表4 CH型——长伸缩焊接式万向联轴器基本参数和主要尺寸

Table 4 The Parameters Dimensions for CH type welded shaft design universal coupling with long length compensation

型号 Types	回转直径 rotatable diameter D mm	公称转矩 Diameter Normal Tn kN·m	疲劳转矩 Fatigue torque Tf kN·m	轴线折角 Axis angle β (°)	伸缩量 Length Compensation Ls mm	尺寸(Dimensions)mm										转动惯量 I Rotary inertia kg·m²		重量G Weight kg	
						L min	D1 (js11)	D2 (H7)	D3	Lm	n d	k	t	b (h9)	g	L min	增长 Length compensation 100mm	L min	增长 Length compensation 100mm
SWC 180 CH1	180	12.5	6.3	≤25	200	925	155	105	114	110	8-17	17	5	-	-	0.181	0.0070	74	2.8
SWC 180 CH2					700	1425										0.216		104	
SWC 225 CH1	225	40	20	≤15	220	1020	196	135	152	120	8-17	20	5	32	9.0	0.561	0.0234	132	4.9
SWC 225 CH2					700	1500										0.674		182	
SWC 250 CH1	250	63	31.5	≤15	300	1215	218	150	168	140	8-19	25	6	40	12.5	1.016	0.0277	190	5.3
SWC 250 CH2					700	1615										1.127		235	
SWC 285 CH1	285	90	45	≤15	400	1475	245	170	194	160	8-21	27	7	40	15.0	2.156	0.0510	300	6.3
SWC 285 CH2					800	1875										2.360		358	
SWC 315 CH1	315	125	63	≤15	400	1600	280	185	219	180	10-23	32	8	40	15.0	3.812	0.0795	434	8.0
SWC 315 CH2					800	2000										4.150		514	
SWC 350 CH1	350	180	90	≤15	400	1715	310	210	267	194	10-23	35	8	50	16.0	7.663	0.2219	672	15.0
SWC 350 CH2					800	2115										8.551		823	
SWC 390 CH1	390	250	125	≤15	400	1845	345	235	267	215	10-25	40	8	70	18.0	12.730	0.2219	817	15.0
SWC 390 CH2					800	2245										13.617		964	
SWC 440 CH1	440	355	180	≤15	400	2110	390	255	325	260	16-28	42	10	80	20.0	22.540	0.4744	1312	21.7
SWC 440 CH2					800	2510										24.430		1537	
SWC 490 CH1	490	500	250	≤15	400	2220	435	275	325	270	16-31	47	12	90	22.5	33.970	0.4744	1554	21.7
SWC 490 CH2					800	2620										35.870		1779	
SWC 550 CH1	550	710	355	≤15	500	2585	492	320	426	305	16-31	50	12	100	22.5	72.790	1.3570	2585	34.0
SWC 550 CH2					1000	3085										79.570		3045	

注：① T_f —在交变负荷下按疲劳强度所允许的转矩。

② L_{min}—缩短后的最小长度。

③ L —安装长度,按需要确定。

Note:① T_f— Permissible torque determined according to fatigue strength under reversing loads.

②L_{min} — The min length when compressed.

③ L— Installation Length determined according to requirements.

SWC——WH型　无伸缩焊接式万向联轴器　　(JB5513—1991)

SWC — WH type welded shaft design universal coupling without length compensation (JB5513-1991)

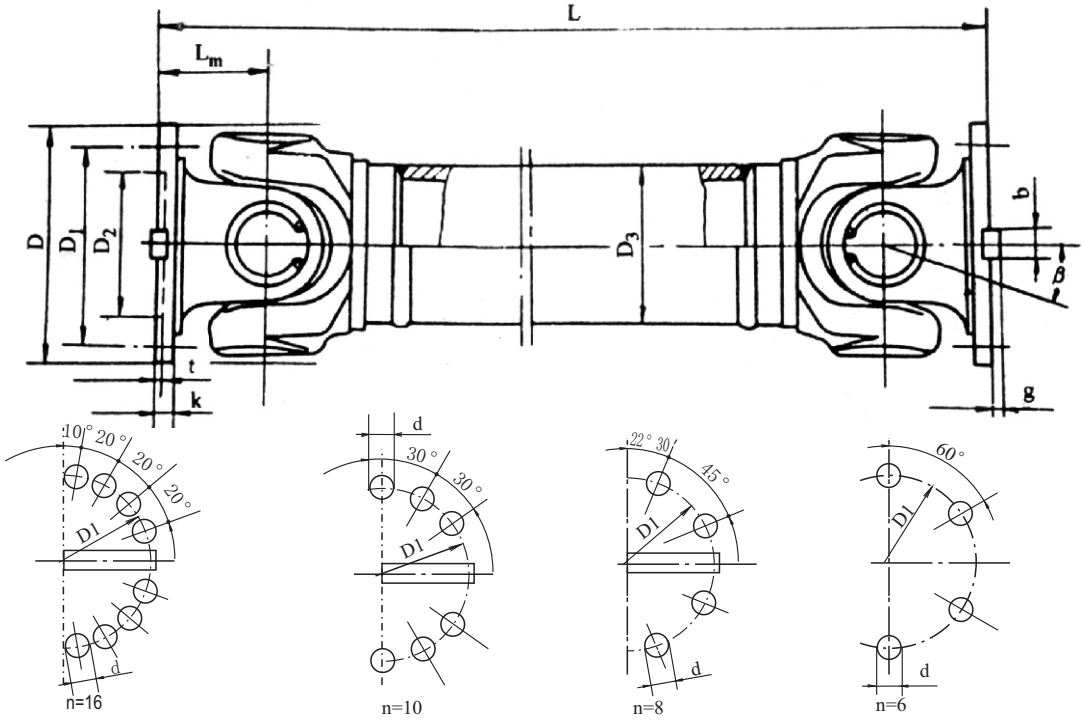

图5 Fig5

表5　　WH型——无伸缩焊接式万向联轴器基本参数和主要尺寸

Table 5 The Parameters and Dimensions for WH type welded shaft design universal coupling without length compensation

型号 Types	回转直径 Rotatable diameter D mm	公称转矩 Diameter Normal Tn kN·m	疲劳转矩 Fatigue torque Tf kN·m	轴线折角 Axis angle β (°)	尺寸 (Dimensions) mm										转动惯量 I Rotary inertia kg·m²		重量G Weight kg	
					L min	D1 (JS11)	D2 (H7)	D3	Lm	n d	k	t	b (h9)	g	L min	增长 Length compensation 100mm	L min	增长 Length compensation 100mm
SWC 100 WH	100	1.25	0.63	≤25	243	84	57	60	55	6-9	7	2.5	—	—	0.0039	0.00019	4.5	0.35
SWC 120 WH	120	2.5	1.25	≤25	307	102	75	70	65	8-11	8	2.5	—	—	0.0096	0.00044	7.7	0.55
SWC 150 WH	150	5	2.5	≤25	350	130	90	89	80	8-13	10	3	—	—	0.0371	0.00157	18	0.85
SWC 180 WH	180	12.5	6.3	≤25	480	155	105	114	110	8-17	17	5	—	—	0.1500	0.00700	48	2.8
SWC 225 WH	225	40	20	≤15	520	196	135	152	120	8-17	20	5	32	9.0	0.3650	0.0234	78	4.9
SWC 250 WH	250	63	31.5	≤15	620	218	150	168	140	8-19	25	6	40	12.5	0.8470	0.0277	124	5.3
SWC 285 WH	285	90	45	≤15	720	245	170	194	160	8-21	27	7	40	15.0	1.7560	0.0510	185	6.3
SWC 315 WH	315	125	63	≤15	805	280	185	219	180	10-23	32	8	40	15.0	2.8930	0.0795	262	8.0
SWC 350 WH	350	180	90	≤15	875	310	210	267	194	10-23	35	8	50	16.0	5.0130	0.2219	374	15.0
SWC 390 WH	390	250	125	≤15	955	345	235	267	215	10-25	40	8	70	18.0	8.4060	0.2219	506	15.0
SWC 440 WH	440	355	180	≤15	1155	390	255	325	260	16-28	42	10	80	20.0	15.790	0.4744	790	21.7
SWC 490 WH	490	500	250	≤15	1205	435	275	325	270	16-31	47	12	90	22.5	26.540	0.4744	1014	21.7
SWC 550 WH	550	710	355	≤15	1355	492	320	426	305	16-31	50	12	100	22.5	48.320	1.3570	1526	34.0

注：① T_f —在交变负荷下按疲劳强度所允许的转矩。

② L—安装长度,按需要确定。

Note:① Tf— Permissible torque determined according to fatigue strength under reversing loads.

②L— Installation Length determined according to requirements.

SWC——WF型 无伸缩法兰式万向联轴器 （JB5513—1991）

SWC ---- WF type flanged design universal coupling without length compensation （JB5513—1991）

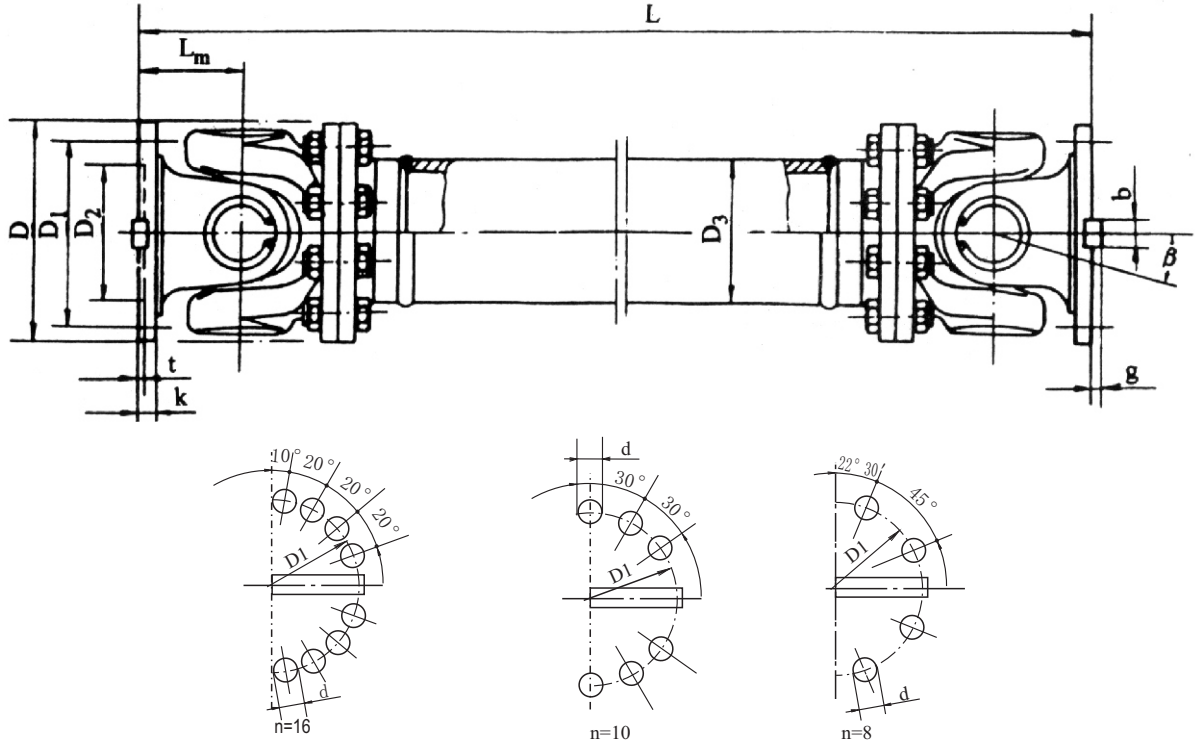

图6 Fig6

表6 WF型——无伸缩法兰式万向联轴器基本参数和主要尺寸

Table 6 The Parameters and Dimensions for WF type flanged design universal coupling without length compensation

型号 Types	回转直径 Rotatable diameter D mm	公称转矩 Diameter Normal Tn kN·m	疲劳转矩 Fatigue torque Tf kN·m	轴线折角 Axis angle β (°)	尺寸 (Dimensions) mm										转动惯量 I Rotary inertia kg·m²		重量G Weight kg	
					L min	D1 (JS11)	D2 (H7)	D3	Lm	n d	k	t	b (h9)	g	L min	增长 Length compensation 100mm	L min	增长 Length compensation 100mm
SWC 180 WF	180	12.5	6.3	≤25	560	155	105	114	110	8-17	17	5			0.248	0.0070	58	2.8
SWC 225 WF	225	40	20	≤15	610	196	135	152	120	8-17	20	5	32	9.0	0.636	0.0234	93	4.9
SWC 250 WF	250	63	31.5	≤15	715	218	150	168	140	8-19	25	6	40	12.5	1.352	0.0277	143	5.3
SWC 285 WF	285	90	45	≤15	810	245	170	194	160	8-21	27	7	40	15.0	2.664	0.0510	220	6.3
SWC 315 WF	315	125	63	≤15	915	280	185	219	180	10-23	32	8	40	15.0	4.469	0.0795	300	8.0
SWC 350 WF	350	180	90	≤15	980	310	210	267	194	10-23	35	8	50	16.0	7.388	0.2219	412	15.0
SWC 390 WF	390	250	125	≤15	1100	345	235	267	215	10-25	40	8	70	18.0	13.184	0.2219	588	15.0
SWC 440 WF	440	355	180	≤15	1290	390	255	325	260	16-28	42	10	80	20.0	23.250	0.4744	880	21.7
SWC 490 WF	490	500	250	≤15	1360	435	275	325	270	16-31	47	12	90	22.5	40.750	0.4744	1173	21.7
SWC 550 WF	550	710	355	≤15	1510	492	320	426	305	16-31	50	12	100	22.5	68.480	1.3570	1663	34.0
SWC 620 WF	620	1000	500	≤15	1690	555	380	426	340	10-38	55	12	100	25.0	127.530	1.3570	2332	34.0

注：① T_f —在交变负荷下按疲劳强度所允许的转矩。

② L—安装长度,按需要确定。

Note:① T_f— Permissible torque determined according to fatigue strength under reversing loads.

②L— Installation Length determined according to requirements.

SWC——WD型　无伸缩短式万向联轴器　　（JB5513—1991）

SWC — WD type short flanged design universal coupling without length compensation （JB5513—1991）

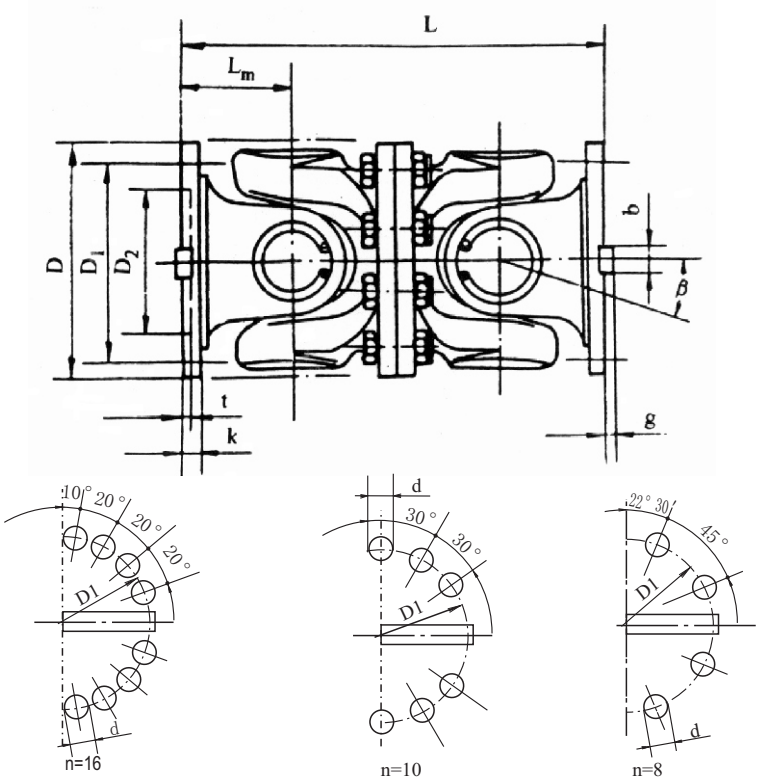

图7 Fig7

表7　　WD型——无伸缩短式万向联轴器基本参数和主要尺寸

Table 7 The Parameters and Dimensions for WD type short flanged design universal coupling without length compensation

型号 Types	回转直径 rotatable diameter D mm	公称转矩 Diameter Normal Tn kN·m	疲劳转矩 Fatigue torque Tf kN·m	轴线折角 Axis angle β (°)	尺寸 (Dimensions) mm									转动惯量 Rotary inertia I kg·m²	重量 Weight G kg
					L	D1 (js11)	D2 (H7)	Lm	n-d	k	t	b (h9)	g		
SWC 180 WD	180	12.5	6.3	≤25	440	155	105	110	8-17	17	5	—	—	0.145	52
SWC 225 WD	225	40	20	≤15	480	196	135	120	8-17	20	5	32	9.0	0.355	82
SWC 250 WD	250	63	31.5	≤15	560	218	150	140	8-19	25	6	40	12.5	0.831	127
SWC 285 WD	285	90	45	≤15	640	245	170	160	8-21	27	7	40	15.0	1.715	189
SWC 315 WD	315	125	63	≤15	720	280	185	180	10-23	32	8	40	15.0	2.820	270
SWC 350 WD	350	180	90	≤15	776	310	210	194	10-23	35	8	50	16.0	4.791	370
SWC 390 WD	390	250	125	≤15	860	345	235	215	10-25	40	8	70	18.0	8.229	524
SWC 440 WD	440	355	180	≤15	1040	390	255	260	16-28	42	10	80	20.0	15.32	798
SWC 490 WD	490	500	250	≤15	1080	435	275	270	16-31	47	12	90	22.5	25.74	1055
SWC 550 WD	550	710	355	≤15	1220	492	320	305	16-31	50	12	100	22.5	46.78	1524
SWC 620 WD	620	1000	500	≤15	1360	555	380	340	10-38	55	12	100	25.0	83.76	2120

注：①T_f —在交变负荷下按疲劳强度所允许的转矩。

Note:① T_f— Permissible torque determined according to fatigue strength under rev-5-ersing loads.

SWP——A型 有伸缩长型万向联轴器 （JB3241—1991）

SWP – A type long design universal coupling with length compensation （JB3241—1991）

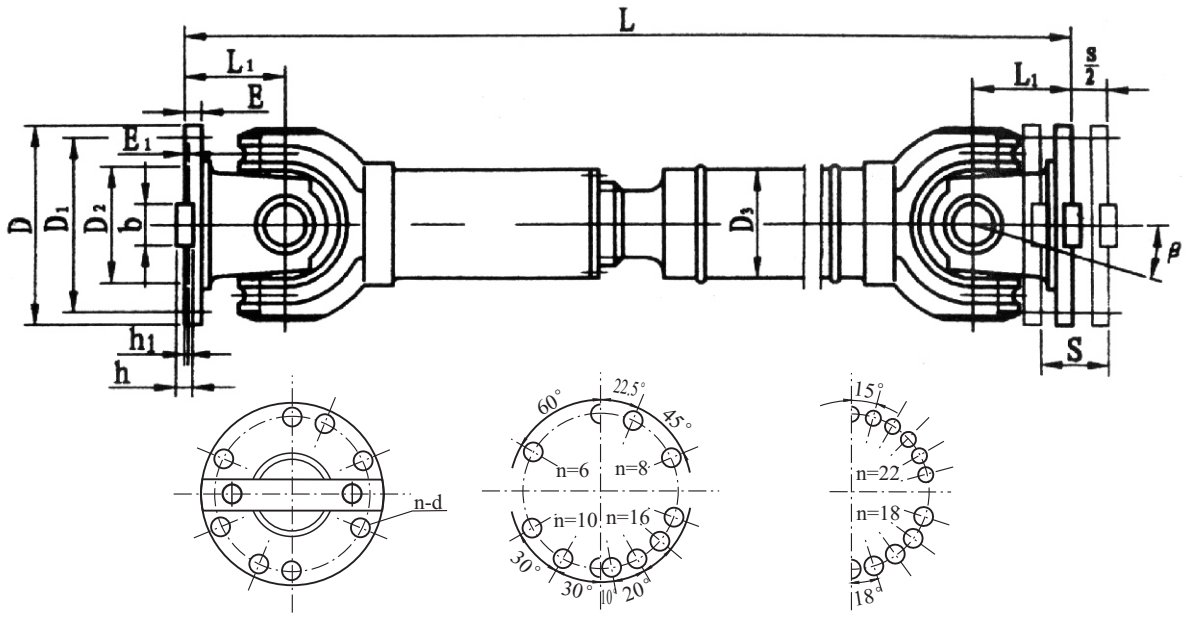

图8 Fig8

表8 A型——有伸缩长型万向联轴器基本参数和主要尺寸

Table 8 The Parameters and major Dimensions for A type long design universal coupling with length compensation

型号 Types	回转直径 rotatable diameter D mm	公称转矩 Normal torque Tn kN·m	疲劳转矩 Fatigu torque Tf kN·m	轴线折角 Axis angle β (°)	伸缩量 Length compen-sation S mm	尺寸 (Dimensions) mm										转动惯量 I Rotary inertia kg·m²		重量G Weight kg	
						L min	D1 (js11)	D2 (H7)	D3	E	E1	b×h	h1	L1	n-d	L min	增长 Length compensation 100mm	L min	增长 Length compensation 100mm
SWP 160 A	160	16	8	≤10	50	660	140	95	114	15	4	20×12	6	85	6-13	0.13	0.0059	47	2.1
SWP 180 A	180	20	10	≤10	60	752	155	105	121	15	4	24×14	7	95	6-15	0.22	0.0072	60	2.3
SWP 200 A	200	31.5	16	≤10	70	823	175	125	127	17	5	28×16	8	110	8-15	0.37	0.0114	81	3.4
SWP 225 A	225	40	20	≤10	76	933	196	135	152	20	5	32×18	9	130	8-17	0.63	0.0290	109	6.6
SWP 250 A	250	63	31.5	≤10	80	978	218	150	168	25	5	40×25	12.5	135	8-19	1.02	0.0407	147	7.3
SWP 285 A	285	90	45	≤10	100	1133	245	170	194	27	7	40×30	15	150	8-21	2.17	0.0702	241	9.4
SWP 315 A	315	140	63	≤10	110	1250	280	185	219	32	7	40×30	15	170	10-23	3.86	0.1144	322	12.0
SWP 350 A	350	180	90	≤10	120	1380	310	210	245	35	8	50×32	16	185	10-23	6.66	0.1663	428	13.6
SWP 390 A	390	250	112	≤10	120	1495	345	235	273	40	8	70×36	18	205	10-25	11.53	0.2695	566	18.0
SWP 435 A	435	355	160	≤10	150	1710	385	255	299	42	10	80×40	20	235	16-28	21.81	0.3645	932	20.0
SWP 480 A	480	450	224	≤10	170	1910	425	275	351	47	12	90×45	22.5	265	16-31	38.04	0.7028	1294	28.0
SWP 550 A	550	710	315	≤10	190	2135	492	320	402	50	12	100×45	22.5	290	16-31	61.28	1.1842	1744	35.7
SWP 600 A	600	1000	500	≤10	210	2580	544	380	450	55	15	90×55	27.5	360	22-34	98.63	1.7159	2330	40.5
SWP 640 A	640	1250	630	≤10	230	2685	575	385	480	60	15	100×60	30	385	18-38	167.67	2.3080	3153	48.3

注： ①T_f—在交变负荷下按疲劳强度所允许的转矩。
②L_{min}—缩短后的最小长度。
③L—安装长度,按需要确定。

Note:① T_f— Permissible torque determined according to fatigue strength under reversing loads.
②L_{min}—The min length when compressed.
③ L—Installation Length determined according to requirements.

SWP——B型　有伸缩短型万向联轴器　　(JB3241—1991)

SWP — B type short design universal coupling with length compensation.　(JB3241—1991)

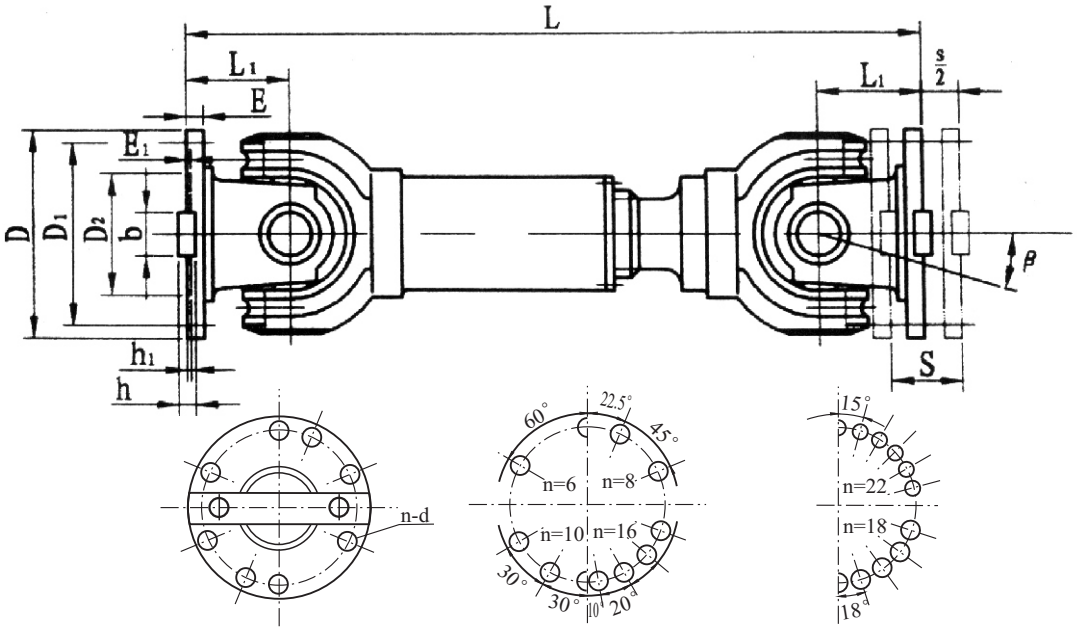

图9 Fig9

表9　　B型——有伸缩短型万向联轴器基本参数和主要尺寸

Table 9 The Parameters and Dimensions for B type short design universal coupling with length compensation.

型号 Types	回转直径 rotatable diameter D mm	公称转矩 Normal torque Tn kN·m	疲劳转矩 Fatigue torque Tf kN·m	轴线折角 Axis angle β (°)	伸缩量 Length compensation S mm	尺寸 (Dimensions) mm									转动惯量 I Rotary inertia kg·m²		重量 G Weight kg	
						L min	D1 (js11)	D2 (H7)	E	E1	b×h	h1	L1	n-d	L min	增长 Length compensation 100mm	L min	增长 Length compensation 100mm
SWP 160 B	160	16	8	≤10	50	585	140	95	15	4	20×12	6	85	6-13	0.14	0.0059	44	2.1
SWP 180 B	180	20	10	≤10	60	640	155	105	15	4	24×14	7	95	6-15	0.23	0.0072	56	2.3
SWP 200 B	200	31.5	16	≤10	70	730	175	125	17	5	28×16	8	110	8-15	0.36	0.0114	75	3.4
SWP 225 B	225	40	20	≤10	76	830	196	135	20	5	32×18	9	130	8-17	0.61	0.0290	108	6.6
SWP 250 B	250	63	31.5	≤10	80	860	218	150	25	5	40×25	12.5	135	8-19	0.98	0.0407	138	7.3
SWP 285 B	285	90	45	≤10	100	1000	245	170	27	7	40×30	15	150	8-21	2.12	0.0702	229	9.4
SWP 315 B	315	140	63	≤10	110	1120	280	185	32	7	40×30	15	170	10-23	3.80	0.1144	309	12.0
SWP 350 B	350	180	90	≤10	120	1230	310	210	35	8	50×32	16	185	10-23	6.60	0.1663	408	13.6
SWP 390 B	390	250	112	≤10	120	1310	345	235	40	8	70×36	18	205	10-25	10.50	0.2695	539	18.0
SWP 435 B	435	355	160	≤10	150	1555	385	255	42	10	80×40	20	235	16-28	22.39	0.3645	903	20.0
SWP 480 B	480	450	224	≤10	170	1740	425	275	47	12	90×45	22.5	265	16-31	38.21	0.7028	1243	28.0
SWP 550 B	550	710	315	≤10	190	1905	492	320	50	12	100×45	22.5	290	16-31	61.00	1.1842	1643	35.7
SWP 600 B	600	1000	500	≤10	210	2600	544	380	55	15	90×55	27.5	360	22-34	99.13	1.7159	2335	40.5
SWP 640 B	640	1250	630	≤10	230	2780	575	385	60	15	100×60	30	385	18-38	170.21	2.3080	2720	48.3

注：①T_f—在交变负荷下按疲劳强度所允许的转矩。

②L_{min}—缩短后的最小长度。

③L—安装长度,按需要确定。

Note:① T_f— Permissible torque determined according to fatigue strength under reversing loads.

②L_{min}—The min length when compressed.

③ L—Installation Length determined according to requirements.

SWP——C型　无伸缩短型万向联轴器　　(JB3241—1991)

SWP ---- C type short design universal coupling without length compensation (JB 3241—1991)

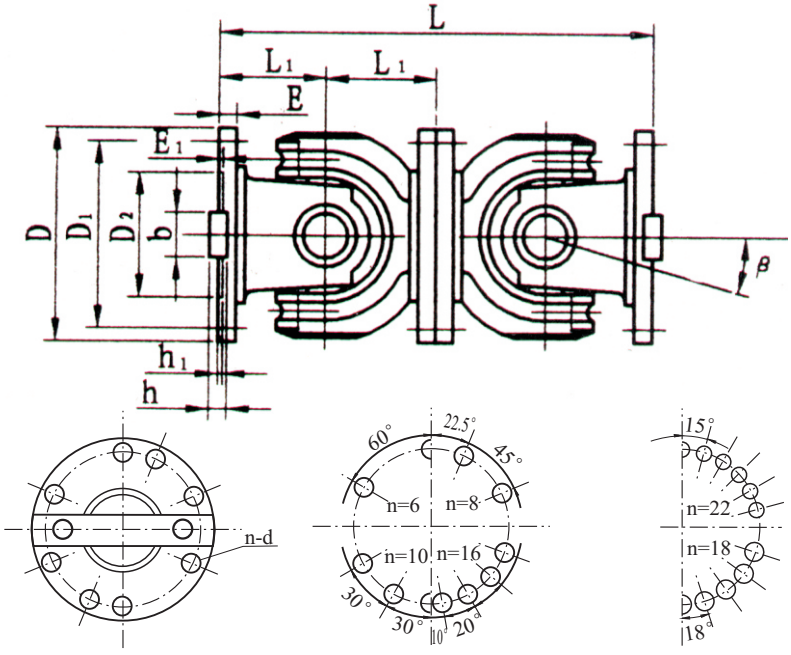

图10 Fig10

表10　　C型——无伸缩短型万向联轴器基本参数和主要尺寸

Table 10 The Parameters and Dimensions for C type—short design universal coupling without length compensation

型 号 Types	回转直径 Rotatable Diameter D mm	公称转矩 Diameter Normal Tn kN·m	疲劳转矩 Fatigue torque Tf kN·m	轴线折角 Axis angle β (°)	尺寸(Dimensions)mm									转动惯量 Rotary inertia I kg·m²	重量 Weight G kg
					L	D1 (js11)	D2 (H7)	E	E1	b×h	h1	L1	n-d		
SWP 160 C	160	16	8	≤10	340	140	95	15	4	20×12	6	85	6-13	0.11	31
SWP 180 C	180	20	10	≤10	380	155	105	15	4	24×14	7	95	6-15	0.17	42
SWP 200 C	200	31.5	16	≤10	440	175	125	17	5	28×16	8	110	8-15	0.29	59
SWP 225 C	225	40	20	≤10	520	196	135	20	5	32×18	9	130	8-17	0.51	80
SWP 250 C	250	63	31.5	≤10	540	218	150	25	5	40×25	12.5	135	8-19	0.93	119
SWP 285 C	285	90	45	≤10	600	245	170	27	7	40×30	15	150	8-21	1.88	179
SWP 315 C	315	140	63	≤10	680	280	185	32	7	40×30	15	170	10-23	2.88	232
SWP 350 C	350	180	90	≤10	740	310	210	35	8	50×32	16	185	10-23	4.59	300
SWP 390 C	390	250	112	≤10	820	345	235	40	8	70×36	18	205	10-25	8.64	432
SWP 435 C	435	355	160	≤10	940	385	255	42	10	80×40	20	235	16-28	17.41	688
SWP 480 C	480	450	224	≤10	1060	425	275	47	12	90×45	22.5	265	16-31	28.25	904
SWP 550 C	550	710	315	≤10	1160	492	320	50	12	100×45	22.5	290	16-31	49.49	1309
SWP 600 C	600	1000	500	≤10	1440	544	380	55	15	90×55	27.5	360	22-34	87.17	1377
SWP 640 C	640	1250	630	≤10	1540	575	385	60	15	100×60	30	385	18-38	152.76	2635

注：①T_f —在交变负荷下按疲劳强度所允许的转矩。

Note:① T_f— Permissible torque determined according to fatigue strength under rev-5-ersing loads.

SWP——D型 无伸缩长型万向联轴器　　(JB3241—1991)

SWP ---- D type long design universal coupling without length compensation (JB3241—1991)

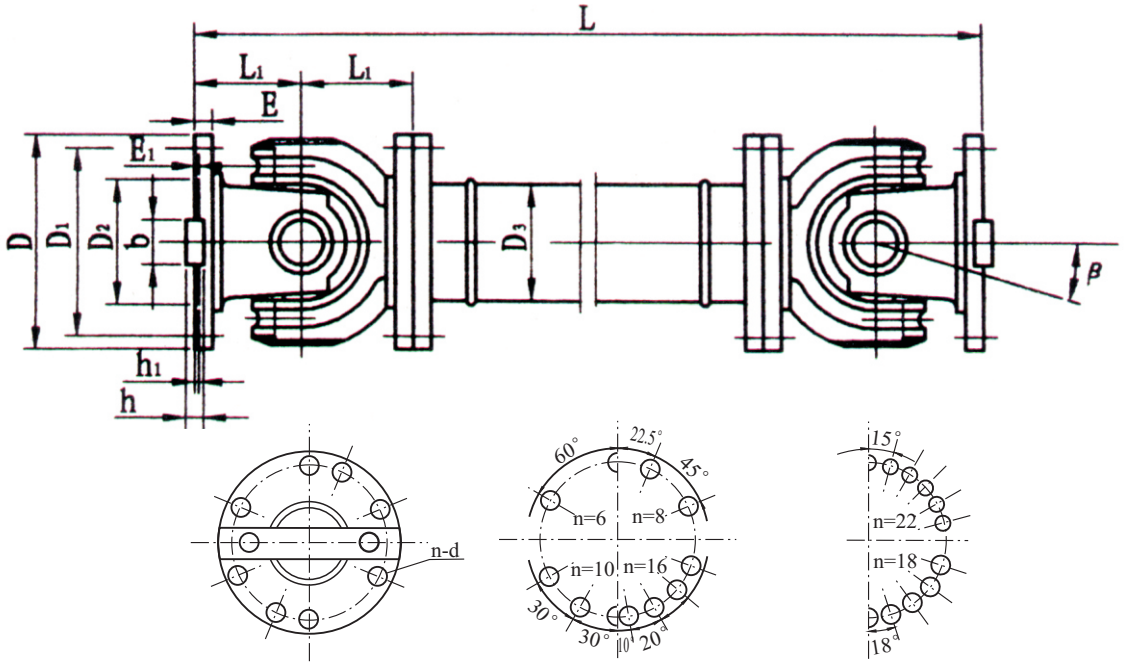

图11 Fig11

表11　　D型——无伸缩长型万向联轴器基本参数和主要尺寸

Table 11 The Parameters and Dimensions for D type —long design universal coupling without length compensation

型号 Types	回转直径 rotatable diameter D mm	公称转矩 Diameter Normal Tn kN·m	疲劳转矩 Fatigue torque Tf kN·m	轴线折角 Axis angle β (°)	尺寸 (Dimensions) mm										转动惯量 I Rotary inertia kg·m²		重量G Weight kg	
					L min	D1 (js11)	D2 (H7)	D3	E	E1	b×h	h1	L1	n-d	L min	增长 Length compensation 100mm	L min	增长 Length compensation 100mm
SWP 160 D	160	16	8	≤10	430	140	95	114	15	4	20×12	6	85	6-13	0.09	0.0059	35	2.1
SWP 180 D	180	20	10	≤10	474	155	105	121	15	4	24×14	7	95	6-15	0.16	0.0072	47	2.3
SWP 200 D	200	31.5	16	≤10	544	175	125	127	17	5	28×16	8	110	8-15	0.28	0.0114	67	3.4
SWP 225 D	225	40	20	≤10	636	196	135	152	20	5	32×18	9	130	8-17	0.53	0.0290	94	6.6
SWP 250 D	250	63	31.5	≤10	690	218	150	168	25	5	40×25	12.5	135	8-19	0.91	0.0407	140	7.3
SWP 285 D	285	90	45	≤10	760	245	170	194	27	7	40×30	15	150	8-21	1.91	0.0702	206	9.4
SWP 315 D	315	140	63	≤10	860	280	185	219	32	7	40×30	15	170	10-23	3.39	0.1144	271	12.0
SWP 350 D	350	180	90	≤10	940	310	210	245	35	8	50×32	16	185	10-23	5.35	0.1663	355	13.6
SWP 390 D	390	250	112	≤10	1060	345	235	273	40	8	70×36	18	205	10-25	10.54	0.2695	501	18.0
SWP 435 D	435	355	160	≤10	1180	385	255	299	42	10	80×40	20	235	16-28	18.56	0.3645	825	20.0
SWP 480 D	480	450	224	≤10	1360	425	275	351	47	12	90×45	22.5	265	16-31	31.69	0.7028	1144	28.0
SWP 550 D	550	710	315	≤10	1460	492	320	402	50	12	100×45	22.5	290	16-31	51.45	1.1842	1589	35.7
SWP 600 D	600	1000	500	≤10	1840	544	380	450	55	15	90×55	27.5	360	22-34	83.53	1.7159	2243	40.5
SWP 640 D	640	1250	630	≤10	1980	575	385	480	60	15	100×60	30	385	18-38	135.60	2.3080	3140	48.3

注：① T_f —在交变负荷下按疲劳强度所允许的转矩。

② L—安装长度,按需要确定。

Note:① Tf— Permissible torque determined according to fatigue strength under reversing loads.

②L— Installation Length determined according to requirements.

SWP——E型　有伸缩双法兰长型万向联轴器　（JB3241—1991）

SWP --- E type double flanged design universal coupling with length compensation (JB3241——1991)

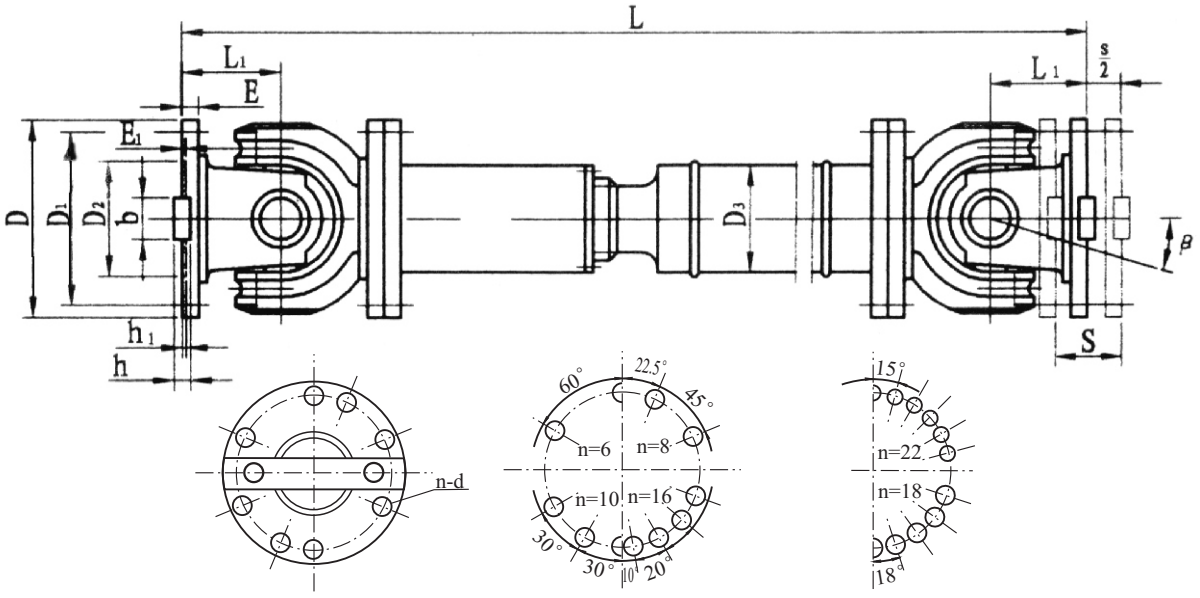

图12 Fig12

表12　　E型——有伸缩双法兰长型万向联轴器基本参数和主要尺寸

Table 12 The Parameters and Dimensions for E type — double flanged design universal coupling with length compensation

型号 Types	回转直径 rotatable diameter D mm	公称转矩 Diameter Normal Tn kN·m	疲劳转矩 Fatigue torque Tf kN·m	轴线折角 Axis angle β (°)	伸缩量 Length Compensation S mm	尺寸 (Dimensions) mm										转动惯量 I Rotary inertia kg·m²		重量G Weight kg	
						L min	D1 (js11)	D2 (H7)	D3	E	E1	b×h	h1	L1	n-d	L min	增长 Length compensation 100mm	L min	增长 Length compensation 100mm
SWP 160 E	160	16	8	≤10	50	715	140	95	114	15	4	20×12	6	85	6-13	0.15	0.0059	49	2.1
SWP 180 E	180	20	10	≤10	60	800	155	105	121	15	4	24×14	7	95	6-15	0.25	0.0072	69	2.3
SWP 200 E	200	31.5	16	≤10	70	880	175	125	127	17	5	28×16	8	110	8-15	0.42	0.0114	81	3.4
SWP 225 E	225	40	20	≤10	76	1000	196	135	152	20	5	32×18	9	130	8-17	0.75	0.0290	108	6.6
SWP 250 E	250	63	31.5	≤10	80	1055	218	150	168	25	5	40×25	12.5	135	8-19	1.26	0.0407	179	7.3
SWP 285 E	285	90	45	≤10	100	1210	245	170	194	27	7	40×30	15	150	8-21	2.67	0.0702	285	9.4
SWP 315 E	315	140	63	≤10	110	1345	280	185	219	32	7	40×30	15	170	10-23	4.38	0.1144	375	12.0
SWP 350 E	350	180	90	≤10	120	1480	310	210	245	35	8	50×32	16	185	10-23	7.42	0.1663	488	13.6
SWP 390 E	390	250	112	≤10	120	1623	345	235	273	40	8	70×36	18	205	10-25	13.27	0.2695	662	18.0
SWP 435 E	435	355	160	≤10	150	1860	385	255	299	42	10	80×40	20	235	16-28	24.62	0.3645	1107	20.0
SWP 480 E	480	450	224	≤10	170	2122	425	275	351	47	12	90×45	22.5	265	16-31	42.81	0.7028	1302	28.0
SWP 550 E	550	710	315	≤10	190	2338	492	320	402	50	12	100×45	22.5	290	16-31	68.81	1.1842	2140	35.7
SWP 600 E	600	1000	500	≤10	210	2930	544	380	450	55	15	90×55	27.5	360	22-34	110.60	1.7159	2703	40.5
SWP 640 E	640	1250	630	≤10	230	3170	575	385	480	60	15	100×60	30	385	18-38	177.77	2.3080	3719	48.3

注：①T_f—在交变负荷下按疲劳强度所允许的转矩。
②L_{min}—缩短后的最小长度。
③L—安装长度,按需要确定。

Note:① T_f— Permissible torque determined according to fatigue strength under reversing loads.
②L_{min}—The min length when compressed.
③ L—Installation Length determined according to

SWP——F型 大伸缩长型万向联轴器　　(JB3241-1991)

SWP— F type long design universal coupling with big length compensation (JB3241—1991)

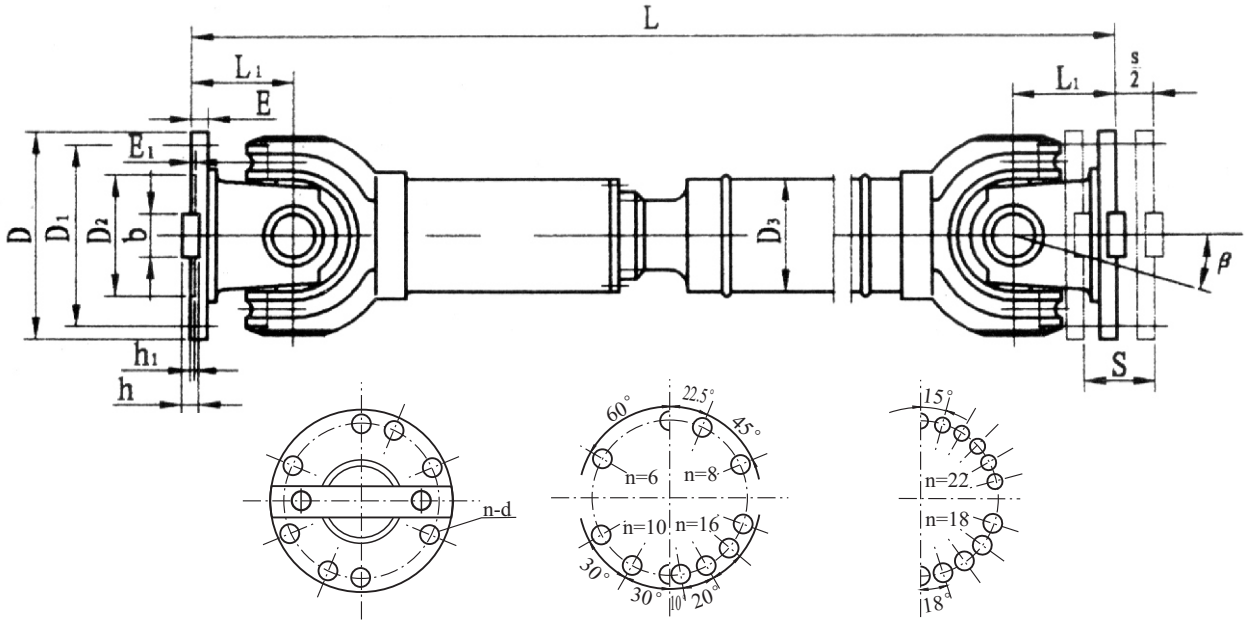

图13 Fig13

表13　　F型——大伸缩长型万向联轴器基本参数和主要尺寸

Table 13 The Parameter and Dimensions for F type — long design universal coupling with big length compensation

型 号 Types	回转直径 rotatable diameter D mm	公称转矩 Diameter Normal Tn kN·m	疲劳转矩 Fatigue torque Tf kN·m	轴线折角 Axis angle β (°)	伸缩量 Length Compensation S mm	尺 寸 (Dimensions) mm										转动惯量 I Rotary inertia kg·m²		重量G Weight kg	
						L min	D1 (js11)	D2 (H7)	D3	E	E1	b×h	h1	L1	n-d	L min	增长 Length compensation 100mm	L min	增长 Length compensation 100mm
SWP 160 F	160	16	8	≤10	150	770	140	95	114	15	4	20×12	6	85	6-13	0.14	0.0059	51	2.1
SWP 180 F	180	20	10	≤10	170	830	155	105	121	15	4	24×14	7	95	6-15	0.23	0.0072	64	2.3
SWP 200 F	200	31.5	16	≤10	190	950	175	125	127	17	5	28×16	8	110	8-15	0.40	0.0114	88	3.4
SWP 225 F	225	40	20	≤10	210	1070	196	135	152	20	5	32×18	9	130	8-17	0.66	0.0290	120	6.6
SWP 250 F	250	63	31.5	≤10	220	1110	218	150	168	25	5	40×25	12.5	135	8-19	1.06	0.0407	158	7.3
SWP 285 F	285	90	45	≤10	240	1270	245	170	194	27	7	40×30	15	150	8-21	2.24	0.0702	255	9.4
SWP 315 F	315	140	63	≤10	270	1410	280	185	219	32	7	40×30	15	170	10-23	3.99	0.1144	344	12.0
SWP 350 F	350	180	90	≤10	290	1540	310	210	245	35	8	50×32	16	185	10-23	6.90	0.1663	460	13.6
SWP 390 F	390	250	112	≤10	315	1680	345	235	273	40	8	70×36	18	205	10-25	11.90	0.2695	600	18.0
SWP 435 F	435	355	160	≤10	335	1880	385	255	299	42	10	80×40	20	235	16-28	22.41	0.3645	985	20.0
SWP 480 F	480	450	224	≤10	350	2080	425	275	351	47	12	90×45	22.5	265	16-31	39.09	0.7028	1356	28.0
SWP 550 F	550	710	315	≤10	360	2230	492	320	402	50	12	100×45	22.5	290	16-31	62.12	1.1842	1785	35.7
SWP 600 F	600	1000	500	≤10	370	2800	544	380	450	55	15	90×55	27.5	360	22-34	100.48	1.7159	2403	40.5
SWP 640 F	640	1250	630	≤10	380	2920	575	385	480	60	15	100×60	30	385	18-38	168.28	2.3080	3207	48.3

注： ①T_f—在交变负荷下按疲劳强度所允许的转矩。
②L_{min}—缩短后的最小长度。
③L—安装长度,按需要确定。

Note:① T_f— Permissible torque determined according to fatigue strength under reversing loads.
②L_{min}—The min length when compressed.
③ L—Installation Length determined according to requirements.

SWP——G型　有伸缩超短型万向联轴器　　(JB3241—1991)

SWP — G type super short design universal coupling with length compensation (JB3241—1991)

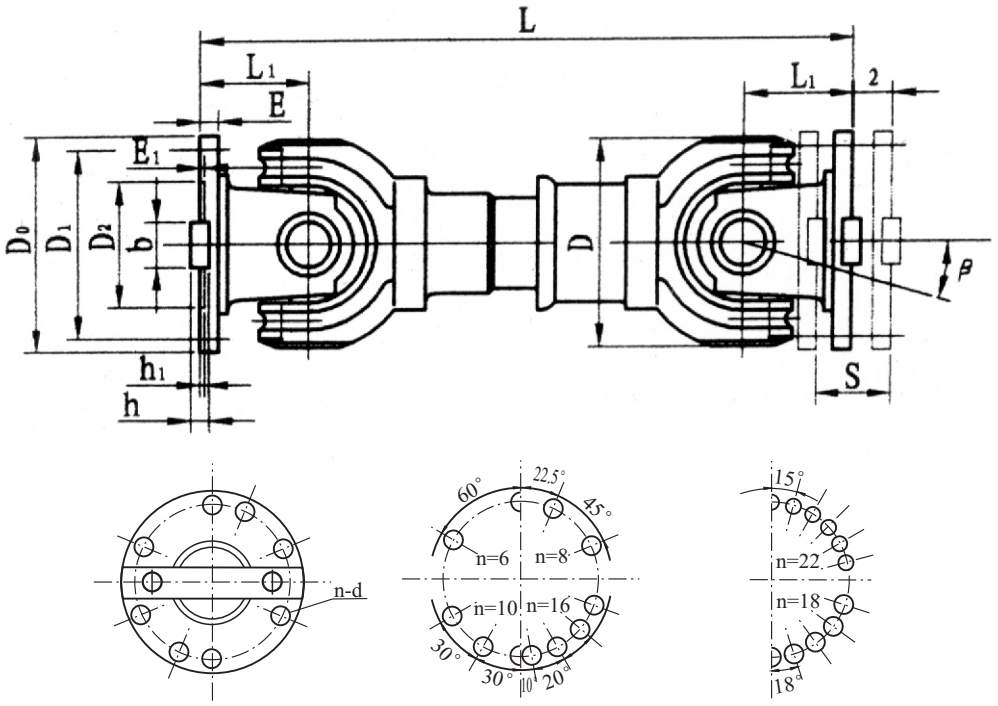

图14 Fig14

表14　G型——有伸缩超短 型万向联轴器基本参数和主要尺寸

Table 14 The Parameter and Dimensions for G type — super short design universal coupling with length compensation

型 号 Types	回转直径 rotatable diameter D mm	公称转矩 Diameter Normal Tn kN·m	疲劳转矩 Fatigue torque Tf kN·m	轴线折角 Axis angle β (°)	伸缩量 Length Compensation S mm	尺 寸 (Dimensions) mm										转动惯量 Rotary inertia I kg·m²	重量 Weight G kg
						L min	D0	D1 (js11)	D2 (H7)	E	E1	b×h	h1	L1	n-d		
SWP 225 G	225	18	8	≤5	40	435	275	248	135	15	5	32×18	9	68	10-15	0.331	60
SWP 250 G	250	25	11.2	≤5	40	515	305	275	150	15	5	40×25	12.5	80	10-17	0.624	97
SWP 285 G	285	35.5	16	≤5	40	565	348	314	170	18	7	40×30	15	90	10-19	1.182	120
SWP 315 G	315	50	25	≤5	40	620	360	328	185	18	7	40×30	15	100	10-19	2.290	170
SWP 350 G	350	71	35.5	≤5	55	715	405	370	210	22	8	50×32	16	108	10-21	3.793	256

注：①T_f—在交变负荷下按疲劳强度所允许的转矩。
②L_{min}—缩短后的最小长度。
③L—安装长度,按需要确定。

Note:① T_f— Permissible torque determined according to fatigue strength under reversing loads.
②L_{min}—The min length when compressed.
③ L—Installation Length determined according to requirements.

四、SWC型十字轴式万向联轴器选用说明
4.Sselection for SWC universal couplings

1. SWC型十字轴式万向联轴器由两个万向节和一根中间轴所构成，如图15。为使主、从动轴的角速度相等，即$\omega_1=\omega_2$，须满足下列三个条件：

① 中间轴与主、从动轴间的节点倾角相等，即$\beta_1=\beta_2$；

② 中间轴两端的叉头位于同一相位；

③ 主、从动轴与中间轴的中心线在同一平面内。

1.SWC type universal couplings are made up of two universal joints and a intermediate shaft, seeing picture 5. In order to make driven shaft's angular velocity equal to active shaft's, viz $\omega_1=\omega_2$, the coupling must meet the following requirements:

① the inclination angle between intermediate shaft and active shaft must be the same as inclination angle between intermediate shaft and driven shaft, viz $\beta_1=\beta_2$;

② the two forks of intermediate shaft must be in the same phases.

③ the center line of active shaft, driven shaft and intermediate shaft must be in the same plane.

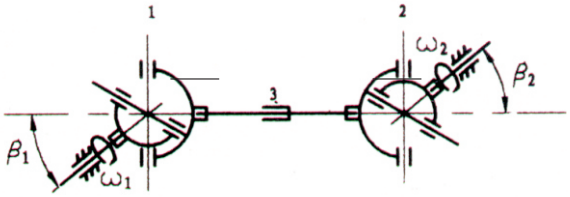

图15 Fig15

1、2 万向节　3 中间轴

1,2:universal joint　3:Intermediate shaft

2. 万向联轴器的安装型式，按其轴线相互位置一般为**Z**型和**W**型，如图**16**。

2.Installation types can be sorted as Z type and W type based on axis positions, seeing fig16.

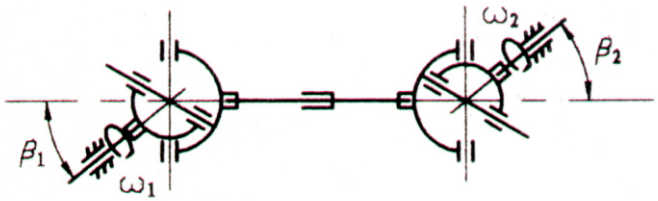

Z型(两轴平行) Type Z(two shafts parallelism)

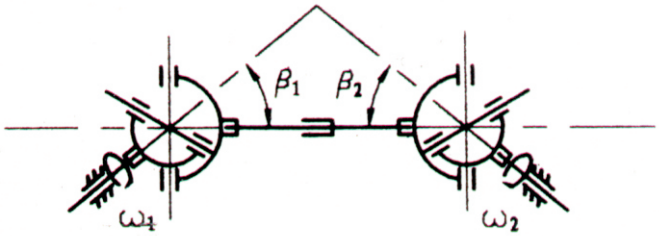

W型(两轴相交) Type W(two shafts intersected)

图16 Fig16

3. 万向联轴器应根据载荷特性、计算转矩、轴承寿命及工作转速选用。

4. 计算转矩由式（1）、式（2）和式（3）求出：

3.The universal couplings should be selected based on load features, calculated torques, bearing life and operating speed.

4.The calculated torque is acquired from Formula 1, Formula 2 and Formula 3

$$T_c = KT \quad \cdots\cdots (1)$$

$$T = 9550 \frac{P_W}{n} \quad \cdots\cdots (2)$$

$$T = 7020 \frac{P_h}{n} \quad \cdots\cdots (3)$$

式中：

T——理论转矩，N·m；
T_c——计算转矩，N·m；
P_w——驱动功率，KW；
P_h——驱动功率，HP；
n ——工作转速，r/min；
K——工作情况系数，见表15。

In Formula:

T—Norminal torque
T_c—Calculated torque
P_w—Driving power, KW
P_h—Driving power, HP
n—Operating speed,rpm
K— Service factors, seeing Table 15

表**15** 工作情况系数 **K**

Table 15 Service factors K

类 型	负荷性质 Load features	设 备 名 称 Drive Equipment	K
Ⅰ类 Type Ⅰ	轻冲击负荷 light shock load	发电机、离心泵、通风机、木工机床、造纸机、运输机 Generators,Centrifugal pumps,Ventilators,Wood handling machines,paper making machines,conveyers	1.2～1.5
Ⅱ类 Type Ⅱ	中冲击负荷 Medium shock load:	压缩机（多缸）、活塞泵（多柱塞）、小型型钢轧机、线材轧机、运输机械主传动 Compressors(multi-cyl.),pumps(Multi-cyl.),Small section mills,Wire mills, Conveyer primary drives	1.5～2.2
Ⅲ类 Type Ⅲ	重冲击负荷 Heavy shock load:	船舶驱动、运输辊道、连续管轧机、连续工作辊道、中型型钢轧机、压缩机（单缸）、活塞泵（单柱塞）、搅拌机、压力机、矫直机、起重机主传动、球磨机 Marine transmissions,Transport roller tables,Continuous tube mills,Continuous working roller tables,Medium section mills,Compressors(single-cyl.),Piston pumps(single-cyl.), Mixers,presses,Straightening machines,Crane drives,Ball mils	2.2～3.5
Ⅳ类 Type Ⅳ	特重冲击负荷 Extra heavy shock load	起重机辅助传动、破碎机、可逆工作辊道、卷取机、破鳞机、初轧机 Crane accessory drives,Crushers,Reversing working roller tables,Reeling drives, Scale breakers,Blooming stands	3.5～5.5
Ⅴ类 Type Ⅴ	极重冲击负荷 Extreme shock load	机架辊道、厚板剪切机 Feed roller drives, Plate shears	6.6～17

5. 一般情况下按传递转矩和轴承寿命选择万向联轴器，但也可根据机械设备的具体使用要求，只校核强度或轴承寿命。

Generally, universal couplings are selected based on the torque to be transmitted and the required bearing life. They can also be selected by checking their torque strengths or bearing life with relation to the requirements of the applicable equipment.

①强度校核:

按式（4）进行强度校核。

① Checking the torsional strength using formula 4:

$$T_c \leqslant T_n \text{或} T_c \leqslant T_f \text{或} T_c \leqslant T_p \quad \cdots\cdots\cdots\cdots\cdots\cdots\cdots\cdots (4)$$

式中:

T_c——计算转矩;N·m ;

T_n——公称转矩(在恒定负荷下,可视同许用转矩),N·m ;

T_f——在交变负荷下按疲劳强度所允许的转矩,N·m;

T_p——在脉动负荷下按疲劳强度所允许的转矩,N·m;

In Formula A4,

T_c—Calculated torqu, N · m;

T_n — Nominal torque (It can be seemed as permission torque under the constant loads), N · m;

T_f—Permissible torque according to the fatigue strength under reversing loads, N · m

T_p — Permissible torque according to the fatigue strength under pulsating loads, N · m

$$T_P = 1.45 T_f$$

②轴承寿命校核

按式(5)进行轴承寿命校核。

② Checking the bearing life using Formula 5

$$L_N = \frac{K_L}{K_L n \beta T^{10/3}} \times 10^3 \quad \cdots\cdots\cdots\cdots\cdots\cdots\cdots\cdots (5)$$

式中:

L_N——使用寿命,h;

n ——工作转速，r/min;

β ——工作时的节点倾角，（°）

In Formula A5

L_N—service life，h ;

n —operating speed，r/min ;

β —joint operating angle in operation，(°)

T——理论转矩，kN·m；
K_L——原动机系数；
电动机：K1=1；
柴油机：K1=1.2；
K_L——轴承容量系数，见表16。

T — Normal torque, Kn.m
K_L — Prime motor factor
Electric motor: K1 = 1
Diesel generator: K1 = 1.2
K_L — Bearing capacity factor, seeing table 16.

表16　轴承容量系数K_L

Table 16 Bearing capacity factor K_L

型号	K_L	型号	K_L
SWC100	0.26×10^{-3}	SWC315	108
SWC120	0.92×10^{-3}	SWC350	370
SWC150	0.18×10^{-1}	SWC390	1010
SWC180	0.66	SWC440	3010
SWC255	1.99	SWC490	8.58×10^{3}
SWC250	9.97	SWC550	23.68×10^{3}
SWC285	35.9	SWC620	77.68×10^{3}

6. 当水平、垂直面间同时有节点倾角时，其合成节点倾角按式（6）计算：

6.When there are simultaneous horizontal and vertical angular misalignments on universal joint shaft, the composite deflection angle is calculated using Formula 6.

$$tg\beta = \sqrt{tg^2\beta_1 + tg^2\beta_2} \qquad \cdots\cdots\cdots\cdots\cdots\cdots\cdots\cdots(6)$$

式(6)中：

β ——合成节点倾角，（°）；
$\beta 1$ ——水平面的节点倾角，（°）；
$\beta 2$ ——垂直面的节点倾角，（°）；

In Formula A6:

β — Composite deflection angle, (degree);
β_1 — Horizontal deflection angle, (degree);
β_2 — Vertical deflection angle, (degree);

7.万向联轴器除按转矩、寿命选择外，当回转直径小于（或等于）390mm时，按式（7）、式（8）校核最大转速。

7.If the joint diameter of the shaft is 390mm or less, Formulas 7 and 8 should be used to check the maximum speed in addition to the considerations of torque and bearing life.

$$n_{max} \leqslant [n_\beta] \qquad \cdots\cdots\cdots\cdots\cdots\cdots\cdots\cdots(7)$$

$$n_{max} \leqslant [n_L] \qquad \cdots\cdots\cdots\cdots\cdots\cdots\cdots\cdots(8)$$

式中：

n_{max}——最大工作转速，r/min；

$[n_\beta]$——与工作倾角有关的最大许用转速（见图17），r/min；

$[n_L]$——与工作长度有关的最大许用转速（见图18），r/min。

In Formula：

n_β — Maximum permissible speed in relation to operating deflection angle, rpm

n_L — Maximum permissible speed in relation to operating length, rpm

N_{max} — Maximum operating speed, rpm

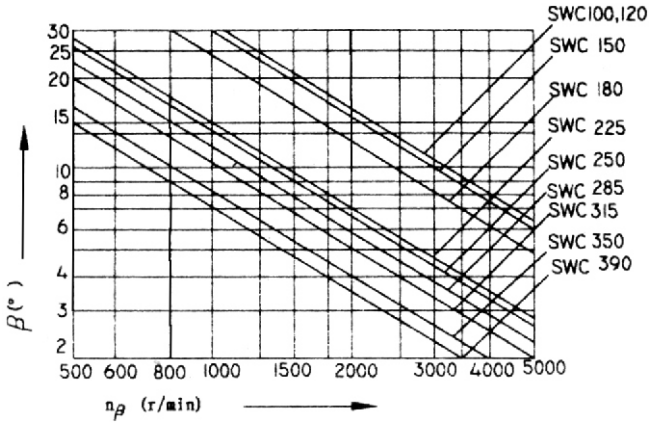

图17　与工作倾角有关的最大许用转速

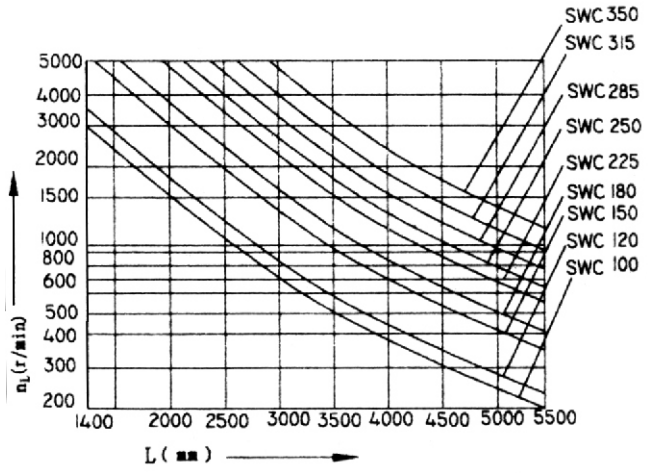

图18　与工作长度有关的最大许用转速

五、SWP型十字轴式万向联轴器选用说明
Selection for SWP universal coupling

1、SWP型十字轴式的万向联轴器是由两个单万向节(1和2)和一根中间轴(3)所组成的双万向联轴器,如图19。要使主动轴、从动轴角速度相等，即 $\omega_1=\omega_2$，必须满足以下三个条件：

a.中间轴与主动轴、从动轴间的折角相等，即 $\beta_1=\beta_2$；

b.中间轴两端的叉头在同一平面内；

C.中间轴与主动轴、从动轴三轴线在同一平面内。

1. This standard measured up universal joint coupling is two directly universal joint coupling which is combined by two single directly universal joint coupling (1 & 2) and a intermediate axis (3). see figure A1. To equal the angle speed of active axis and driven axis, viz $\omega_1=\omega_2$, and they should be measure up the three conditions below:

a. The angles of intermediate axis to active axis, and intermediate axis to driven axis, which are equal. viz. $\beta_1=\beta_2$

b. The caws on two end of intermediate axis are in same plane.

c. The axial line of intermediate axis, active axis, driven axis are in same plane.

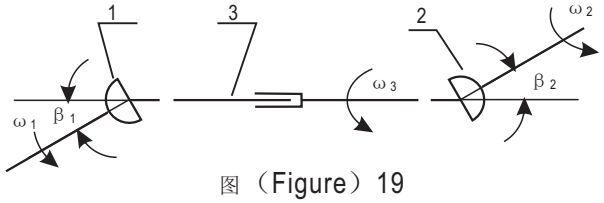

图（Figure）19

2、万向联轴器的布置分为平面系统和空间系统。

2.1、 平面系统布置：中间轴与主动轴、从动轴三轴线在同一平面内（即满足1C）的系统称为平面系统。按其轴线组成的形状分为Z型和W型，见图20。

2. the location of universal joint coupling are classified as plane system and space system.

2.1 plane system locate:
the plane system should be measure up the conditions which is the axial lines of intermediate axis, active axis, driven axis are in one plane(viz.1c), and the shape composed by the axial lines are Z shape or W shape. See figure 20.

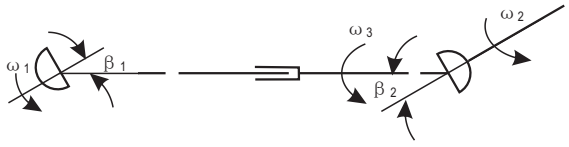

Z型

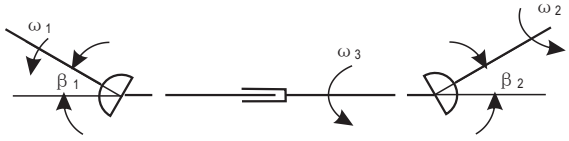

W型

图（Figure）20

平面系Z型和W型的布置若满足1a及1b条件，则为等角速度传动，否则为不等角速度传动。平面系不等角速度传动的主动轴与从动轴的角位移差计算的基本公式如下式（9）：

If the plane system Z shape and W shape measure up the conditions A1a and A1b, so the system is equal angle speed transmission, otherwise, the system is vary angle speed transmission. the angle displacement between active axis to driven axis in the vary angle speed transmission of plane system can be calculated by the formula (9) below:

$$\varphi = arctg\left(\frac{\beta_1^2}{4}\sin 2\varphi_1 - \frac{\beta_2^2}{4}\sin 2\varphi_1\right) \qquad \cdots\cdots\cdots\cdots\cdots\cdots\cdots\cdots (9)$$

式中：φ_1——主动轴的角位移量，（°）

β_1——中间轴轴线与主动轴轴线的折角，rad；

β_2——中间轴轴线与从动轴轴线的折角，rad。

当$\varphi_1 \approx 45°$时，φ值为最大。

in function:

φ_1 is angle displacement of active axis,(degree);

β_1 is angle of intermediate axes to active axes, (rad);

β_2 is angle of intermediate axes to active axes, (rad).

when φ_1 is equal to 45 degree, φ values to maximum.

2.2 空间系布置：中间轴与主动轴、从动轴三轴线不在同一平面内（即不能满足1c）的系统称为空间系统。按在垂直投影面上的轴线形状组成以下四种形式，见表17、图21。

2.2 the space system locate:

Intermediate axes, active axes, driven axes are not in one plane (viz. can not measure up 1c)There are four sorted by the axes shape in vertical and horizontal projection plane.

表17　　Table 17

空间系统　Space system				
垂直面 Vertical	Z	Z	W	W
水平面 Horizontal	Z	W	Z	W

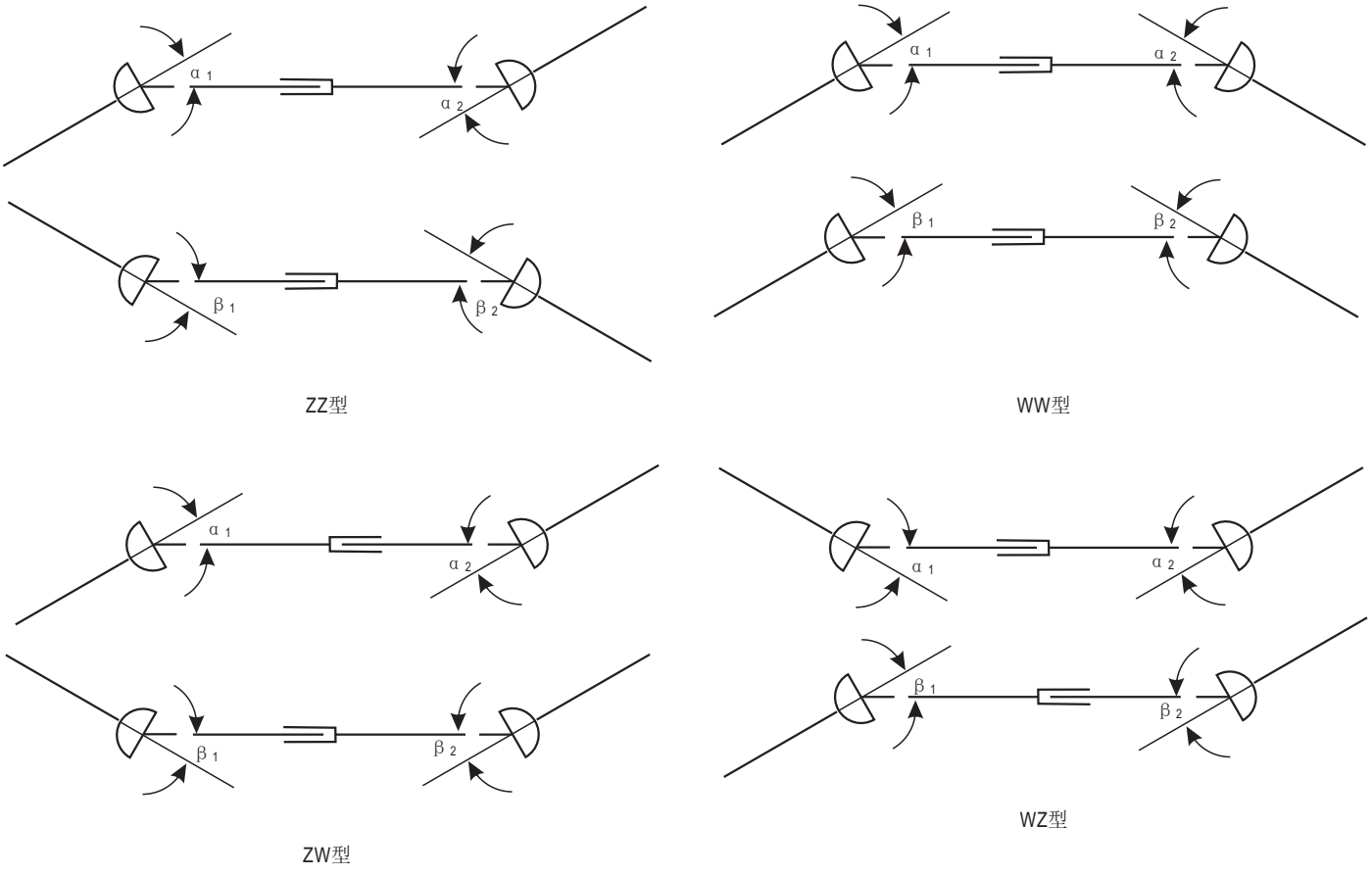

图（Figure）21

空间系均为不等角速传动。其主动轴与从动轴间的角位移计算的基本公式(10)如下：

They are very speed transmission in space system. The angle displacement between active shaft to driven shaft can calculated by the formula(10) below:

$$\varphi = arctg[\frac{\gamma_1^2}{4}\sin 2\varphi_1 - \frac{\gamma_2^2}{4}\sin 2(\varphi_1 + \overline{\varphi})] \quad \cdots\cdots\cdots\cdots\cdots\cdots\cdots\cdots\cdots\cdots(10)$$

式中：φ_1——主动轴的角位移量，（°）

γ_1——中间轴轴线与主动轴轴线的空间折角，rad；

γ_2——中间轴轴线与从动轴轴线的空间折角，rad。

当$\overline{\Phi}_1$——两空间折角所在的两个平面的交角对于选定坐标轴的相位差角，（°）。

in function:

φ_1 is angle displacement of active shaft,(degree);

γ_1 is space angle of intermediate axes to active axes, (rad);

γ_2 is space angle of intermediate axes to active axes, (rad).

$\overline{\Phi}_1$ is a phase displacement angle between selected coordinate axis to the corner of two planes which the two space angle in.

$$tg\gamma_1 = \sqrt{tg^2\alpha_1 + tg^2\beta_1} \quad \cdots\cdots\cdots\cdots\cdots\cdots\cdots\cdots\cdots\cdots(11)$$

$$tg\gamma_2 = \sqrt{tg^2\alpha_2 + tg^2\beta_2} \quad \cdots\cdots\cdots\cdots\cdots\cdots\cdots\cdots\cdots\cdots(12)$$

式中：

α_1、β_1——为单万向联轴器1在垂直投影投影面和水平投影面的折角，（°）；

α_2、β_2——为单万向联轴器2在垂直投影投影面和水平投影面的折角，（°）。

in function:

α_1 and β_1 is angles in vertical and horizontal projection planes of the single universal joint coupling 1, (degree).

α_2 and β_2 is angles in vertical and horizontal projection planes of the single universal joint coupling 1, (degree).

$$\overline{\Phi} = 90° \pm \Phi$$

式中：Φ——为空间折角所在的两个平面交角。称为移置转角，（°）。

对于图21的ZZ、WW型 $\Phi=\Phi_1+\Phi_2$

对于图21的ZW、WZ型 $\Phi=180°-\Phi_1-\Phi_2$

±——其中“—”是对于两根（组）万向联轴器，其中旋转方向相反的那根而言。

In function:

Φ is called moving position turning angle, which is the cross angle between two planes that the space angles in.

While ZZ shape and WW shape in figure 21:

While ZW shape and WZ shape in figure 21:

±: The "—" in ± that refer to the one which turning reverse direction of the two sets of universal joint coupling.

$$tg\Phi_1=\frac{tg\alpha_1}{tg\beta_1}$$

$$tg\Phi_2=\frac{tg\alpha_2}{tg\beta_2}$$

式中：Φ_1、Φ_2——为两空间折角所在的两个平面对于水平投影面的交角，称为移置角，（°）。

当$2\varphi_1$在下式（13）之值时，φ值为最大：

in function:

Φ_1 and Φ_2 is called moving position angle, which is the cross angle in horizontal projection plane.

The φ value to maximum when $2\varphi_1$ measure up the function below:

$$2\varphi_1=arctg\left(\frac{\gamma_1^2/\gamma_2^2+\cos 2\overline{\Phi}}{\sin 2\overline{\Phi}}\right) \quad \cdots\cdots\cdots\cdots\cdots\cdots\cdots\cdots(13)$$

3　万向联轴器布置型式的调整：万向联轴器在工作过程中，各轴线位置的变化称为布置型式的调整。

万向联轴器布置型式是根据机构的传动而选定的。其折角（β）的大小，既要考虑传动能力（计算转矩T_c）的影响，又要使其主、从动轴间产生的　角位移差（φ）越小越好。因此，万向联轴器布置型式的调整，以不影响其原来各轴线折角的比例关系为原则。

Z型的调整只能移动；W型的调整只能转动，见图22。

3　Adjustment of disposal type of universal joint coupling:

While the universal joint coupling working, the alternation of axes position is called adjustment of disposal type.

The disposal type of universal coupling should be selected by the transmission of components. The value of the angle (β), not only to consider the transmission capacity(by calculating the torque Tc), but also to minimum the angle displacement (φ) between the active shaft to driven shaft. Therefore, The principle of adjustment of disposal type of universal joint coupling is not to affect the ratio of angles of all axes.

Adjustment of Z shape only by moving and the W shape only by turning. See figure 22.

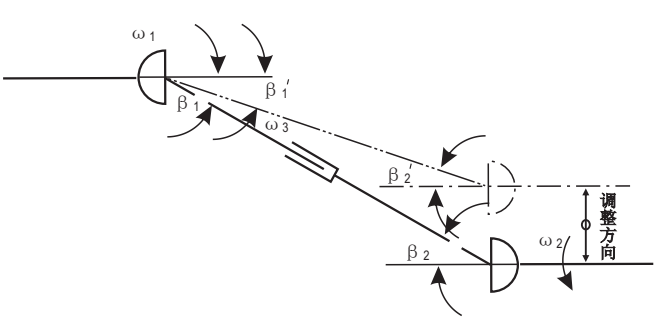

Z型

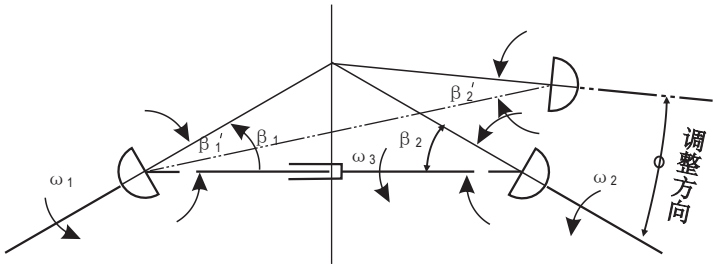

W型

图（Figure）22

4、万向联轴器的选用

4.1、按传递转矩计算：

4. Selection of universal joint coupling:

4.1 calculating according to transmission torque:

$$T_c=TK_nK_hK_\beta K_a \leqslant T_n \qquad \cdots\cdots\cdots\cdots\cdots\cdots\cdots\cdots (14)$$

或 or $\quad T_c \leqslant T_f \qquad \cdots\cdots\cdots\cdots\cdots\cdots\cdots\cdots (15)$

式中:

T_c——万向联轴器的计算转矩，N·m；

T——万向联轴器的理论转矩，N·m；

T_n——万向联轴器的公称转矩，N·m；按标准规定选取。它是在给定条件下的理论计算数值，即联轴器转速n≈10 r/min，轴承寿命L_h=5000h，轴线折角β=3°，以及负荷平稳下的数值；

T_f——万向联轴器的疲劳转矩，N·m；按标准规定选取。当在交变负荷作用时，按T_f选用万向联轴器；

K_n——万向联轴器的转速系数，由图23查取；

K_h——万向联轴器的轴承寿命系数，由图24查取；

K_β——万向联轴器的两轴线折角系数，由图25查取；

K_a——负荷性质（即工作条件）系数，由表18查取。

in function:

T_c is calculated torque of universal joint coupling, Nm

T is theory torque of universal joint coupling, Nm

T_n is nominal torque of universal joint coupling, Nm; selected according to standard JB 3241-91. Tc is a theory value that calculated in the appointed conditions. Viz. coupling turning speed is approximately 10 rpm, bearing life is 5000h, axes angle β equal 3 degree, and the load is stabilization.

T_f is fatigue torque, Nm; selected according to standard JB 3241-91. selecting universal joint coupling according to T_f when the active load is reversing.

K_n is coefficient of turning speed of universal joint coupling. selected by looking up figure 23.

K_h is coefficient of bearing life, selected by looking up figure A6;

K_β is angle coefficient of two axes of universal joint coupling, selected by looking up the figure 25;

K_a is coefficient of characteristic of loads(viz. working conditions), selected by looking up in table 18.

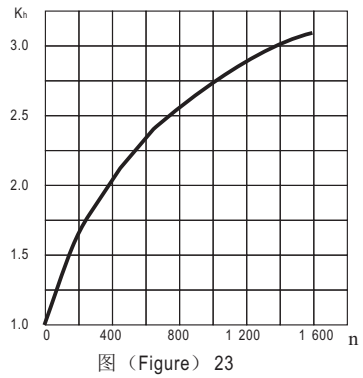

图（Figure） 23

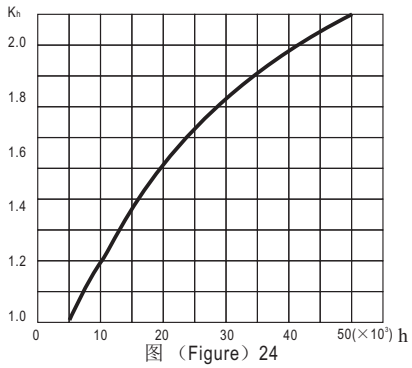

图（Figure）24

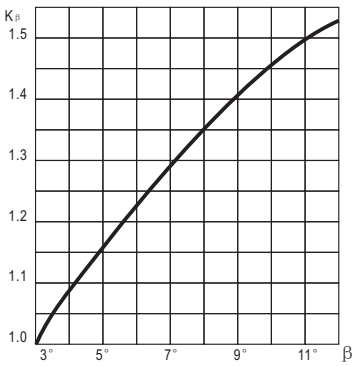

图（Figure） 25

表18　负荷性质系数

table 18 coefficient of characteristic of loads

工作负荷机构性质 Characteristic of loads of working components	Ka	工作负荷机构性质 Characteristic of loads of working components	Ka
负荷均匀，工作平稳 Equality loads, working smoothly	1.0	较大冲击负荷和频繁正反转 More big impacting, and frequency positive and negative turning	1.3~1.5
负荷不均匀，中等冲击 Uneven loads, middling impacting	1.1~1.3	特大冲击负荷和频繁正反转 Large impacting loads, and frequency and negative turning	>1.5

4.2 对于转速高、折角大或其长度超出标准规定的万向联轴器，除按4.1进行计算外，还必须验算其灵活转动的可能性以及临界转数。灵活转动的可能性用n β 表示，一般情况下：

$$n\beta < 18000$$

式中：

n——万向联轴器的转速，r/min；

β——万向联轴器的轴线折角，（°）。

5　万向联轴器传动效果的考虑

5.1 由于万向联轴器是用于联接不在同一轴线上的两轴，所以采用的布置型式应使主、从动轴的角位移差越小越好。当 $\varphi_{max}\neq 0$时，一般都要考虑其传动效果对机械的影响：如两根（组）传动轴瞬时速度差或附加转矩变化对机械的影响；重载或惯性较大的机械，由于万向联轴器布置产生的惯性附加转矩应不大于工作

4.2 point to the universal joint coupling, which working in high speed, and big angle or the length exceeding the standard type, beside to calculating by function A4.1, the critical speed and feasible of flexible turning of it should be checking computation for the feasible of flexible turning is denominated as n β, in general conditions:

$$n\beta < 18000$$

in function:

n is the turning speed of universal joint coupling, rpm;

β is the angle of axes of universal joint coupling, (degree).

5 considering for transferring effecting of universal joint coupling

5.1 Because the universal joint coupling is using for connecting two axes which are not in one axis line, It is better as the angle displacement of selected disposal type is less valued. when $\varphi_{max}\neq 0$, the transferring effecting to mechanism should be considering: e.g. the effecting to mechanism from difference of two axes speeds or alternative of attaching torque; for heavy loads or more big inertia mechanism, the inertia attaching torque produced by disposal type of universal

转矩的30%等等。

5.2惯性附加转矩的计算

如果万向联轴器的布置不能满足（1a、1b、1c）等速三条件时，其瞬时角速度在每一转中出现两个极大值和两个极小值。然而主动轴是以等速转动，从动轴后面的运动部分有很大的转动惯量，亦趋向等速运动，而万向联轴器主、从动轴的角位移差就要由整个传动系统的变形和间隙来补偿。假定全部角位移差都由万向联轴器扭转变形来补偿，这个扭转变形的转矩称为万向联轴器的惯性附加转矩，其大小取决于角位移差和万向联轴器的扭转刚度。

joint coupling should not be exceed 30 percent of the value of working torque; etc.

5.2 calculating inertia attaching torque If disposal type of universal joint coupling can not measure up the equality speed(1a,1b,1c),the instantaneous speed in one turn has two maximum and two minimum values. Because the active shaft turning in equal speed, and the movable component of back part of driven shaft has more big turning inertia that make it turning in equal speed, but the angle displacement between active shaft and driven shaft should be compensative by the clearness and distortion of whole transmission system. If all compensation from distortion of universal joint coupling, the torque from distortion is denominated as inertia attaching torque of universal joint coupling, its value lies on the angle displacement and torsion hardness of universal joint coupling.

$$T_{\varphi max}=T_{\varphi 1}\varphi_{max}<0.3T$$

式中：

$T_{\varphi 1}$——万向联轴器每扭转一分角度所需转矩（N·m/1'），图26为万向联轴器在中等长度时$T_{\varphi 1}$之值（SWP600、SWP640可不考虑）。

φ_{max}——为万向联轴器产生的最大角位移差（'），按式（9）、（10）计算。

in function:

$T_{\varphi 1}$ is requirement torque as the universal joint coupling turn a cent angle.(Nm/1'), figure 26 drawing out the $T_{\varphi 1}$ while universal joint coupling in middling length(swp600 and swp640 are need not to consider).

φ_{max} is the maximum difference (') of angle displacements that produced by universal joint coupling, calculated by function 9 and 10.

注：以转矩选用万向联轴器时，要把$T_{\varphi max}$考虑在内。即：

Note:

When selecting universal joint coupling according to torque, the $T_{\varphi max}$ should be consider in. viz:

$$(T_c+T_{\varphi max}) \leqslant T_n$$

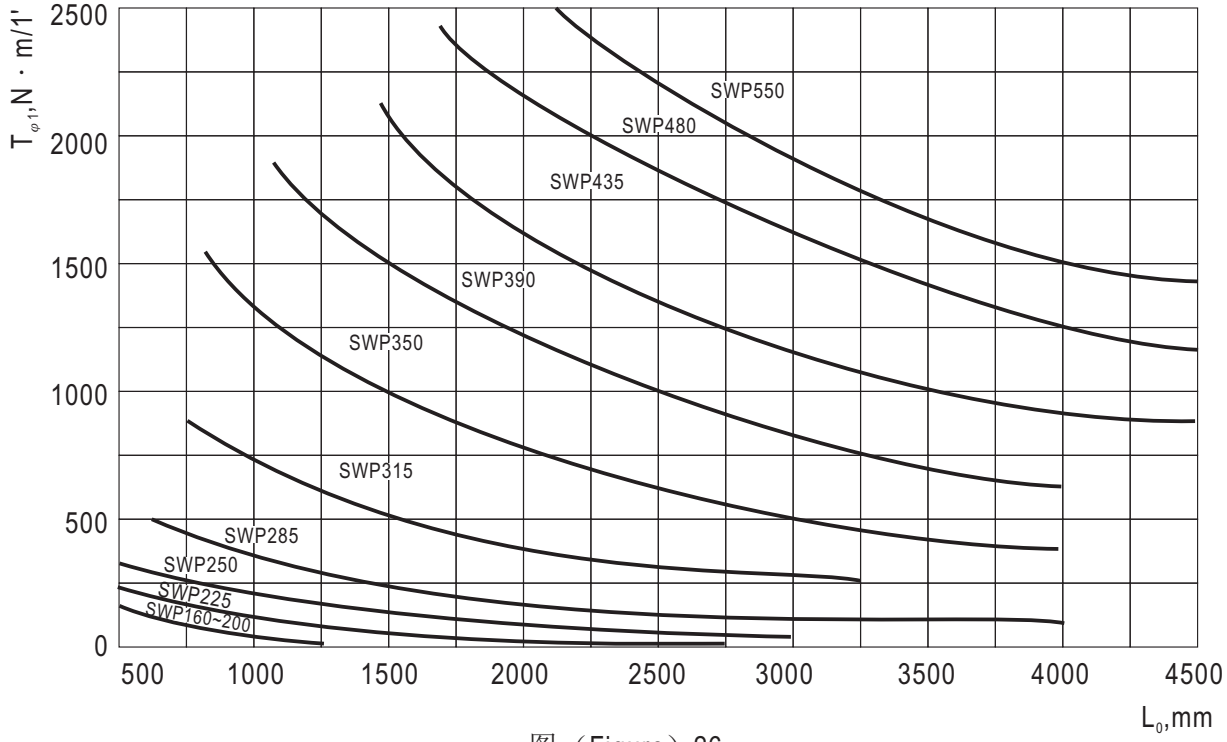

图（Figure）26

注：L_0——万向联轴器节点间长度。

Note:
L_0 is length between joints of universal joint coupling.

表**19**　联接螺栓拧紧力矩

Table 19 connecting bolt's tension torque

螺栓强度(级) Bolt strength	螺栓公称直径 mm　Bolt normal diameter mm													
	6	8	10	12	16	20	24	30	36	42	48	56	64	72
	拧紧力矩T_A N·m　Tension torque T_A N·m													
10.9	10	32	64	111	270	526	906	1820	3170	3957	5973	9575	14307	20712

诚告用户：

在保证各型号联轴器的主要性能参数和装配尺寸不变的情况下，随着日后的工艺与材料的改进，其某些尺寸会作修正，届时恕不另行通知。

Kindly note:

We may adjust some specifications following improvement of assembly technology and material and we may not inform you.

六、安装与维护

SWC型、SWP型十字轴式万向联轴器的正确安装，合理使用和定期维护，对其传动效果及使用寿命是很重要的。使用中请注意下列事项：

A、安装前须清洗联轴器和被联接件的法兰面，检查两结合面的平整完好性，否则须作修正。

B、检查联轴器十字叉头的位置，注意箭头标志，使花键轴和花键套两端的叉头处于同一相位。

C、安装时不要用安装杠杆转动万向节，否则会损坏轴承密封件。

D、法兰联接螺栓只能从被联接件法兰端插入，螺母由万向联轴器的法兰侧拧紧。如果被联接件空间尺寸有限制，可考虑采用双头螺栓。

E、法兰联接前应当检查螺栓和螺母是否符合规定的强度级别（螺栓强度10.9级、螺母强度10级）。

F、安装时应对准被联接件法兰盘螺栓孔的配对标记后，用扭矩扳手对称均匀地拧紧法兰盘上的螺栓和螺母，其拧紧力矩按表19，螺纹处宜加润滑脂。

G、万向联轴器在初始带载工作一至二个班后，须检查螺栓、螺母是否松动，并按规定以标准拧紧力矩再次拧紧，宜重复两次。

H、在高温条件下工作的万向联轴器，根据情况可在1至2周内加油一次。在一般条件下工作的可三个月加油一次（包括花键及万向联轴器轴承）。润滑脂宜采用2号锂基脂或2号二硫化钼锂基脂。

I、正常工作的万向联轴器，也应进行定期检查，尤其是用在重要部位和长期连续使用而中途不能停机的场合，更须定期维修保养。

J、 联轴器在拆卸维修后，重新组装时应按拆卸的相反顺序进行，并按标志使之和拆卸前的位置完全相同。应注意花键轴和花键套两端叉头的相位相同，并保证十字轴单边有0.1~0.3mm的轴向间隙。联接螺栓应按表17的预紧力矩用扭矩扳手进行拧紧。组装后，对其轴承和花键进行再润滑。

Installation and Maintenance

For SWC type and SWP type of universal couplings, Rational use and regular maintenance are very important for transmission performance and service life. The users should pay attention to the following points:

A.Before installation, the joints and surface of flange should be cleaned. It is necessary to check if the connection surface is leveled up and good condition, otherwise, should be adjusted.

B.Please check the fork's position and arrow mark. Please make sure the fork of splined shaft and hub are in the same phase.

C.During installation, do not rotate universal joint by using lever, otherwise it will damage bearing sealed part.

D.Insert bolt into the hole of jointed equipment's flange and then tighten nut from the side of universal coupling. If the space is limited, users can consider using stud.

E.Before installation, users should check tension level of bolt and nut to make sure them conform to the standard. (10.9 grade for bolt and 10 grade for nut)

F.During installation, users should align the mating mark of flange and then tighten bolt and nut by using torque wrench symmetrically and uniformly. We suggest apply a drop of oil into screw holes. Tension relationship is in table 19.

G.After coupling has run with load for a shift or two, please check the bolts and nuts to make sure they are not loose. If loose, please tighten them according to standard force moment. This should be repeated after another two shifts.

H.If the coupling is working in high temperature condition, oil it every one or two weeks. In general condition, oil the coupling every three months. We recommend No.2 lithium base grease.

I.In general condition, the coupling should be checked regularly. Especially if the coupling is working in key condition or working constantly for long time without stop, it must be checked regularly. J.Aftermaintenance, follow assemble instructions in reverse to disassemble and make sure the position are the same as before according to the marks. Make sure the fork of splined shaft and the hub are in the same phase. There should be 0.1~0.3mm axial clearance beside Jspider. The connecting bolt should be tighten by using torque wrench according to Table 17. After assemble, please lubricate bearing and splined shaft.

新一代联轴器
为您创造更多效益!

NOVEL COUPLINGS BRING MORE BENEFITS FOR YOU!

宁波伟隆港口机械有限公司
NINGBO WEILONG PORT MACHINERY CO., LTD.
宁波伟隆传动机械有限公司
NINGBO WEILONG TRANSMISSION MACHINERY CO., LTD.

地址：中国宁波市东钱湖创新工业园四香路1号
电话：(86)574-83066266
传真：(86)574-88372264
邮编：315121
电子信箱：weilong@weilongme.com.cn
公司网站：http://www.weilongme.com.cn
服务热线:(86)574-88373131

Addr: No.1,Sixiang Road, Industry Zone,
Dongqianhu Tourism Zone,Ningbo,China
Tel: (86)574-83066266
Fax: (86)574-88372264
P.C.: 315121
E-mail: weilong@weilongme.com.cn
Web-site: http://www.weilongme.com.cn
Serve-online: (86)574-88373131